DREXELBROOK®

A Leader in Level Measurement

Installation and Operating Instructions

For the

Universal IV™ Lite and **Universal IV™ Pro** Model Transmitters

2-Wire RF Admittance / Capacitance Level Measurement System with HART® Protocol

For Assistance Call 1-800-527-6297
Outside North America + 215-674-1234

AMETEK®
DREXELBROOK

AMETEK Drexelbrook makes no warranty of any kind with regard to the material contained in this manual, including, but not limited to, implied warranties or fitness for a particular purpose. Drexelbrook shall not be liable for errors contained herein or for incidental or consequential damages in connection with the performance or use of material.

© Copyright AMETEK Drexelbrook

EDO# 3-12-121
UIV-LM
Issue # 1

Universal IV™ Transmitter

with HART® Protocol

AMETEK®
DREXELBROOK
An ISO 9001 Certified Company

205 Keith Valley Road, Horsham, PA 19044
U.S. and Canada: 1-800-553-9092
24-Hour Service: 1-800-527-6297
International: +1 215-674-1234
Fax: +1 215-674-2731
E-mail: drexelbrook.info@ametek.com
Website: www.drexelbrook.com

Table of Contents

Section 1: Introduction 1
1.1 System Description 1
1.2 Technology 3
1.3 Models Available 4
1.4 Sensing Element Model Numbering 6
1.5 Area Classifications 6

Section 2: Installation 7
2.1 Unpacking 7
2.2 Hazardous Location Installations 7
2.3 Mounting the Electronic Unit 8
2.4 Wiring the Electronic Unit 14
2.5 Wiring the Sensing Element 15
2.6 Spark (Static Electricity) Protection 17
2.7 Surge Voltage (Lightning) Protection 18
2.8 RFI (Radio Frequency Interference) Filters 18
2.9 Electrostatic Filters (Desalter Filter) 20

Section 3: Configuration and Calibration with Drexelbrook PC Software HRTWin 21
3.1 Installing The USB Modem 21
3.2 Install the Windows Version HRTWin Software 22
3.3 Description of Function Keys 23
3.4 Configuration 24
3.5 Calibration 27
3.6 Set D/A Trim 31
3.7 Strapping Table 32
3.8 Save/Print Entries 34
3.9 Validation 35
3.10 Calibration & Configuration via Display/Keypad 38
3.11 Status Messages 44

Section 4: Configuration and Calibration with HART® Calibrator 47
4.1 Start-up 47
4.2 Configuration 48
4.3 Calibration 50
4.4 D/A Trim 54
4.5 Bench Calibration Information Sheet 56

Section 5: Troubleshooting 57
5.1 Identifying a Problem/Symptom 58
5.2 Troubleshooting Loop Connection 58
5.3 Universal IV transmitter does not communicate with HRTWin Software 59
5.4 Transmitter Drift Test 60
5.5 Troubleshooting Sensing Element 61
5.6 Troubleshooting Coaxial Cable 63
5.7 Static Electricity 64
5.8 Radio Frequency Interference 64
5.9 Factory Assistance 65
5.10 Field Service 65
5.11 Customer Training 66
5.12 Return Equipment 66
5.13 Universal IV Troubleshooting Guide 67

Section 6: Specifications 69
6.1 Transmitter Specifications 69

Section 7: Hazardous Location Approval Supplementary Installation 71
7.1 General safety information 71
7.2 The Compartment Cover 72
7.3 Standards and Approvals 73

Section 8: Control Drawings 75
8.1 ATEC / IECEX 75
8.2 FM US / FMC 83

Section 9: Approval Certificates 99
9.1 FM US Approval Certificate 99
9.2 FM Canada Approval Certificate 105
9.3 IECEx Approval Certificate 111
9.4 ATEX Approval Certificate 116
9.5 ATEX Declaration of Conformity 119

Section 1: Introduction

1.1 System Description

The instructions in this manual are for the AMETEK Drexelbrook Universal IV for level measurement in liquids, slurries, interfaces, and granulars.

Each system consists of a Universal IV two-wire, 4-20 mA HART® electronic unit and a 700 series sensing element. A 380 series connecting cable is also supplied for connection of the sensing element to remote electronic units.

The Universal IV system is an admittance-to-current transducer. A change in level produces a change in admittance which results in a change of current. It is termed a two-wire transmitter because the same two wires that are used to power the unit also indicate the change in level (4-20 mA).

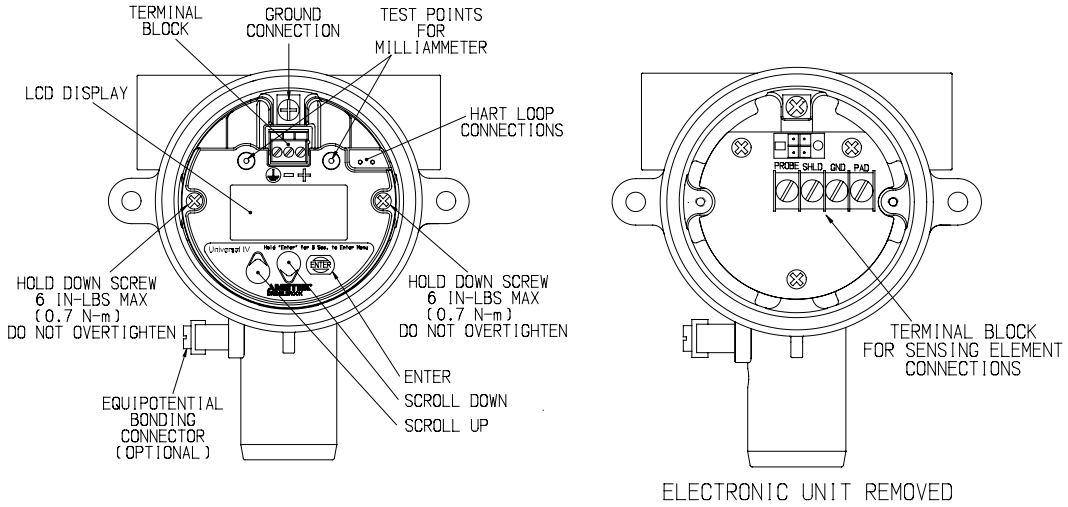

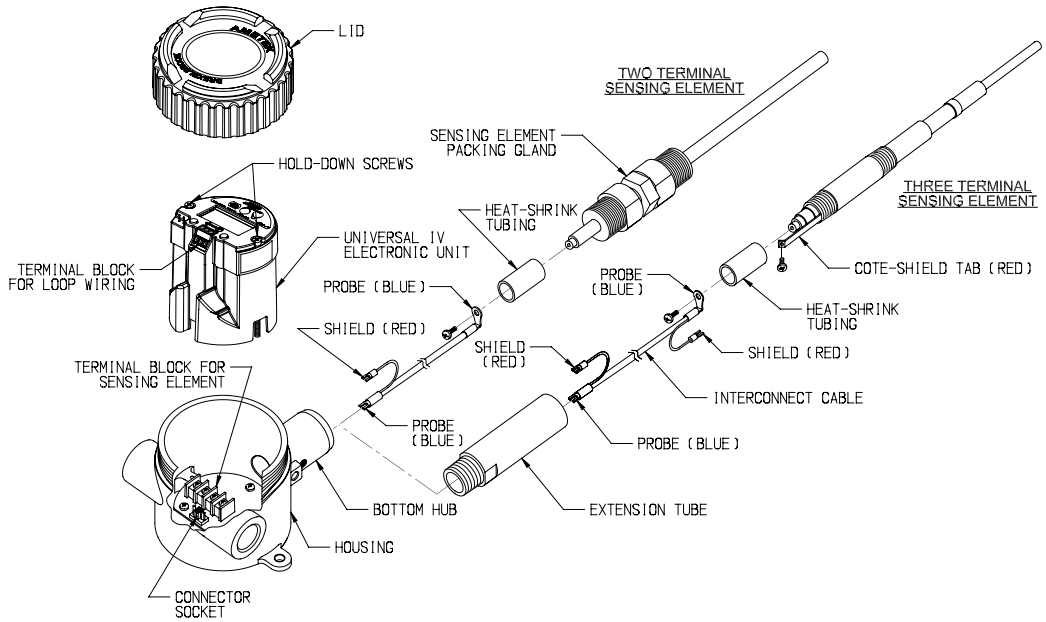

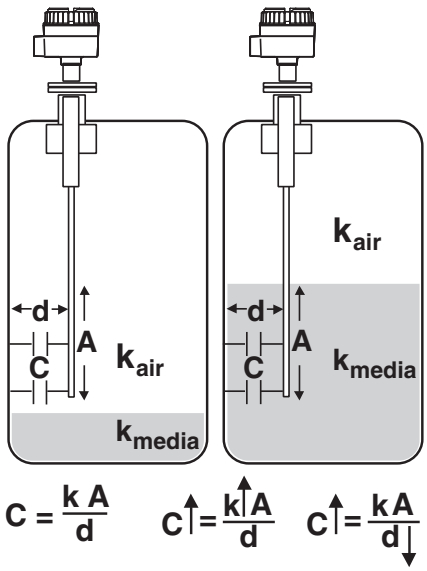

Figure 1-1 Capacitance Sensing Element

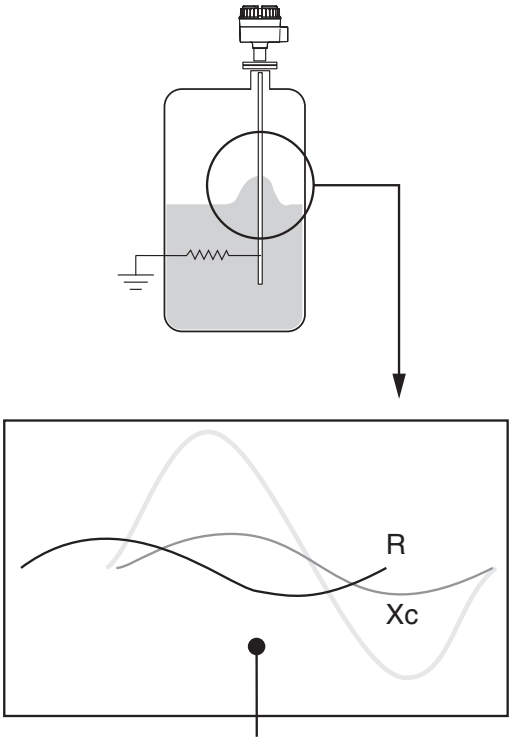

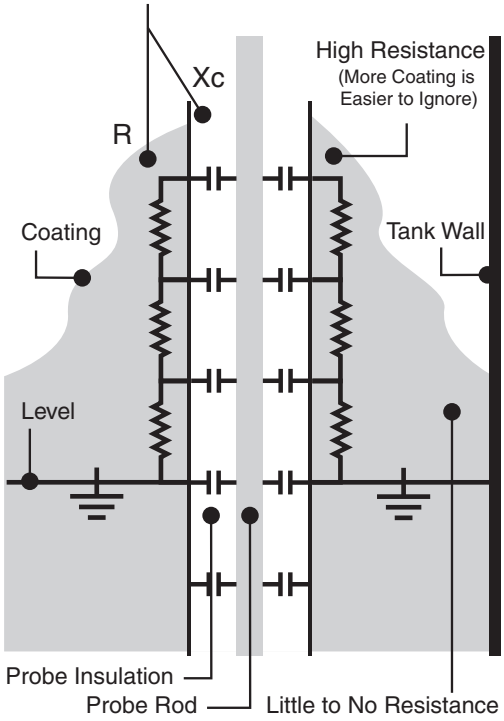

Figure 1-2 RF Admittance Sensing Element with Cote-Shield

1.2 Technology

Capacitance

In a simple capacitance measurement, the capacitance increases as the process medium covers more of the sensing element. In an insulating medium, this is due to the increase in dielectric constant (k) from air to that of the medium. In a conductive medium, this is due to the decreased distance from ground as the medium provides a conductive path from the ground reference, typically the vessel wall, to the outer surface of the sensing element insulation.

This change in capacitance causes an imbalance in a capacitance bridge which is detected in the circuitry and converted to an output proportional to level.

Radio Frequency (RF) Admittance

RF Admittance is the next generation. Although similar to capacitance it adds a valuable feature, the ability to compensate for conductive coatings. The patented Cote-Shield™ circuitry of the Universal IV Pro Model measures resistance and capacitance separately. The level component of the sensing element capacitance has a negligible resistance however, a conductive coating will have a much greater resistance. The design of the circuitry also produces signals for the resistive and capacitive RF currents of a conductive coating to be of identical magnitude but of opposite phase. This allows the Universal IV to subtract the effect of the coating and produce an accurate level measurement even in the most difficult applications.

This patented Cote-Shield™ circuitry is designed into the Universal IV Pro Model and enables the instrument to ignore the effect of buildup or material coating on the sensing element. The sensing element is mounted in the vessel and provides a change in RF admittance indicating the level of material.

The Cote-Shield™ circuitry prevents the transmission of RF current through the coating on the sensing element. The only path to ground available for the RF current is through the material being measured.

The result is an accurate measurement regardless of the amount of coating on the sensing element. By far the most versatile technology available, it works with all types of materials in a vast array of conditions; from cryogenics to high temperature, and from vacuum to 10,000psi pressure.

Lite Model

The Universal IV Lite Model is the entry level RF Capacitance measurement system for use where Cote-Shield™ is not required. Lite models can be used in non-coating and insulating coating applications. Universal IV Lite is not recommended for use in conductive **coating** applications. In addition, the Lite model has a 20-7,000 pF range that may limit the measurement span on conductive liquids.

Pro Model

The Universal IV Pro model has the most versatility with full capabilities of Code-Shield and measurement span of 1-45,000 pF. The Pro can handle shorter and longer measurement spans and is compatible with a vast array of applications.

1.3 Models Available

System Electronics and Sensing Element Model

Technology

U Universal IV

Measurement Type / Frequency and Phasing

P0 Pro model: Admittance, 100 KHz, 0° Phase, 1 - 45,000 pF span
P1 Pro model: Admittance, 15 KHz, 0° Phase, 1 - 45,000 pF span
P2 Pro model: Admittance, 100 KHz, 45° Phase, 1 - 45,000 pF span
P3 Pro model: Admittance, 15 KHz, 45° Phase, 1 - 45,000 pF span
L0 Lite model: Capacitance, 100 KHz, 0 Phase, 20 - 7,000 pF span
L1 Lite model: Capacitance, 15 KHz, 0° Phase, 20 - 7,000 pF span

Digital Protocols

1 HART®

Future Use

0 Future Use

Approvals

0 Unapproved
1 FM/FMc IS
2 FM/FMc XP
3 ATEX ia
4 ATEX d [ia]
5 IECEx ia
6 IECEx d [ia]

Electrical Connection

0 3/4" NPT without external ground lug
1 M20 with external ground lug
2 3/4" NPT with external ground lug

Surge / Noise Suppression

0 No additional filtering required
1 Signal filtering RFI and Surge protection (Integral or Remote)
2 Probe RFI (Remote only)
3 Signal filtering and Probe RFI (Remote only)
4 Probe HDSP (Heavy Duty Spark Protector) - Remote only
5 Signal filtering and Probe HDSP (Remote only)
6 Probe RFI and Probe HDSP (Remote only)
7 Signal filtering and Probe RFI and Probe HDSP (Remote only)
D Desalter Filter (Remote only)

Integral / Remote options

0 Integral configuration
1 Remote configuration without cable
2 Remote configuration with 10 ft General Purpose Cable
3 Remote configuration with 25 ft. General Purpose Cable
4 Remote configuration with 35 Ft. General Purpose Cable
5 Remote configuration with 50 ft. General Purpose Cable
6 Remote configuration with 75 ft. General Purpose Cable
7 Remote configuration with 100 ft. General Purpose Cable
8 Remote configuration with 10 ft. Triax Cable
9 Remote configuration with 25 ft. Triax Cable
A Remote configuration with 35 ft. Triax Cable
B Remote configuration with 50 ft. Triax Cable
C Remote configuration with 75 ft. Triax Cable
D Remote configuration with 100 ft Triax Cable
E Remote configuration with 10 ft Hi Temp Cable
F Remote configuration with 25 ft. Hi Temp Cable
G Remote configuration with 35 ft. Hi Temp Cable
H Remote configuration with 50 ft. Hi Temp Cable
J Remote configuration with 75 ft. Hi Temp Cable
K Remote configuration with 100 ft Hi Temp Cable
L Remote configuration with 10 ft Hi Temp Composite Cable
M Remote configuration with 25 ft. Hi Temp Composite Cable
N Remote configuration with 35 ft. Hi Temp Composite Cable
O Remote configuration with 50 ft. Hi Temp Composite Cable
P Remote configuration with 75 ft. Hi Temp Composite Cable
Q Remote configuration with 100 ft Hi Temp Composite Cable
Z Remote configuration with custom cable

Dual seal option

0 Without Dual Seal option
1 With Dual Seal option

Sensing Element Code

Sensing element 3-digit code (Refer to probe selection table)
000 Remote System without a probe
ZZZ Special sensing element
R00 Universal retrofit kit upgrade with all adapters for all probes
R## Retrofit kit upgrade with probe dependent adapters
R09 Remote only retrofit kit upgrade

Special Software

0 None
Z Special Software

U ☐ ☐ **1** **0** ☐ ☐ ☐ ☐ ☐ - ☐ ☐ ☐ - ☐

1.3 Models Available

Sensing Element Dimensions and Process Connection

Process gland wetted part (X)

- **A** Carbon Steel
- **B** 316/316L SS
- **C** Hast C-276
- **P** PFA
- **E** Monel
- **U** Titanium
- **X*** Upon request

Process connection (XX)

- **A0** 3/4" NPT
- **B0** 1" NPT
- **BA** 1" 150# RF Carbon Steel
- **BB** 1" 150# RF 316/316L Stainless Steel
- **CB** 1" 300# RF 316/316L Stainless Steel
- **BD** 1" 150# RF 316/316L SS TFE
- **C2** 1 1/2" Tri-Clamp
- **E2** 2" Tri-Clamp
- **FA** 2" 150# RF Carbon Steel
- **FB** 2" 150# RF 316/316L Stainless Steel
- **GB** 2" 300# RF 316/316L Stainless Steel
- **FC** 2" 150# RF CS TFE Face
- **FD** 2" 150# RF 316/316L SS TFE
- **FE** 2" 150# RF CS Inserted TFE
- **FH** 2" 150# RF 316L SS Seal-Tyte
- **G0** 1/2" NPT
- **IA** 3" 150# RF Carbon Steel
- **IB** 3" 150# RF 316/316L Stainless Steel
- **J2** 3" Tri-Clamp
- **JB** 3" 300# RF 316/316L Stainless Steel
- **KB** 4" 150# RF 316/316L SS
- **KC** 4" 150# RF CS TFE Face
- **KD** 4" 150# RF 316/316L SS TFE
- **KD** 4" 150# RF 316/316L SS TFE
- **KG** 4" 150# RF CS Seal-Tyte
- **LA** 4" 300# RF Carbon Steel
- **LB** 4" 300# RF 316/316L Stainless Steel
- **WB** 6" 600# RF 316/316L Stainless Steel
- **2B** 8" 600# RF 316/316L Stainless Steel
- **XX*** Many more options available upon request (ANSI, DIN, JIS)

Insertion Length in MM

XXXXXX Length of the probe in millimeters from process connection to the bottom of the probe

Cote-Shield™ Length in MM

XXXXXX Length of the Cote-Shield in millimeters for 3-terminal probes. Not applicable for 2-terminal probes

Inactive Length in MM

XXXXXX Length of the inactive part of the probe that is not measured.
This option is primarily used in Interface measurement and Desalters

Inactive Material

- **A** Carbon Steel
- **B** 316/316L SS
- **C** Hast C-276
- **T** Teflon Covered
- **N** Not Applicable
- **X*** Many more options are available upon request

1.4 Sensing Element Model Numbering

System Reference Number	Typical Application Type	Sensing Element Model	Standard Material of Construction	OD and Standard Mounting	Temperature Pressure Limits
301	Low Viscosity conductive liquids	700-0001-022	TFE-covered rod	Rod 3/8" OD 3/4" NPT	100°F @ 1000 PSI 300°F @ 500 PSI
303	Low Viscosity insulating liquids	700-0001-026	TFE-covered rod with 316 SS perforated concentric shield	Concentric Shield 1.66" OD 1 1/2" NPT	100°F @ 1000 PSI 300°F @ 500 PSI
311	Low viscosity conducting liquids	700-0002-024	TFE-covered rod	Rod 3/4" OD 3/4" NPT	100°F @ 1000 PSI 450°F @ 500 PSI
312	Interface of liquids containing ketones and esters	700-0002-027	FEP-covered rod	Rod .56" OD 3/4" NPT	100°F @ 1000 PSI 300°F @ 500 PSI
603	Heavy Coating, Highly Conductive liquids	700-0002-037	“PVDF”-covered rod	Rod .54" OD 3/4" NPT	100°F @ 1000 PSI 250°F @ 500 PSI
606	Conducting liquids and interfaces	700-0002-057	“PVDF”-covered rod	Rod .84" OD 1" NPT	100°F @ 1000 PSI 250°F @ 500 PSI
713	Agitated conducting liquids and granulars	700-0005-018	“PVDF”-covered cable	Cable 5/16" OD 3/4" NPT	100°F @ 1000 PSI 250°F @ 500 PSI
716	Heavy-duty for abrasive granulars	700-0005-019	Urethane-covered cable	Cable 3/4" OD 2" NPT	150°F @ 5 PSI
318	Long lengths of conducting liquids	700-005-054	PFA-covered cable	Cable .093" OD 3/4" NPT	100°F @ 1000 PSI 300°F @ 500 PSI
747	Insulating liquids and granulars	700-0205-078	PVDF covered cable	Cable 5/16" OD 1" NPT	250°F @ 5 PSI
101	Insulating liquids	700-1202-001	316 SS PEEK	Bare Rod 3/8" OD 3/4" NPT	450°F @ 200 PSI

1.5 Area Classifications

The standard electronic unit mounted in the durable housing is dual-rated and meets the following conditions:

- Type NEMA 4X Waterproof / Corrosion
- IP 66

See Section 1.4 for detailed specifications of sensing elements that are most often recommended with a Universal IV system. Contact the factory or your local representative if additional information is required.

The electronic unit and sensing element are connected by a three-terminal coaxial cable. Drexelbrook cables are available in

- General Purpose
- Triax
- Composite (first 10 feet high temperature)

See Section 6.2 for Specifications

Section 2: Installation

2.1 Unpacking

Carefully remove the contents of the carton and check each item against the packing list before destroying any packing material. If there is any shortage or damage, report it immediately to the factory.

2.2 Hazardous Location Installations

Installation in hazardous areas must comply with the control drawings ***See Section 7.4***. Always install to the NEC and/ or local requirements/ codes/ directives as mandated by the authority having jurisdiction. Before using Intrinsic Safety Barriers, read manufacturer's instruction for barrier operation. The electronic unit is rated T4 and may not be used with materials with an auto ignition temperature of less than 135C°. Substitution of components may impair intrinsic safety. To prevent ignition of flammable or combustible atmospheres, disconnect power before servicing.

2.3 Mounting the Electronic Unit

The Universal IV Series system was designed for field mounting, but it should be mounted in a location as free as possible from vibration, corrosive atmospheres, and any possibility of mechanical damage. For convenience at start-up, mount the instrument in a reasonably accessible location. Ambient temperatures should be between -40°F and 167°F (-40°C and 75°C).

The mounting location for the sensing element is often determined by whether there is a suitable location inside a vessel. An external side arm or stilling well can be considered.

The following sensing element mounting and installation instructions should be followed so that the equipment will operate properly and accurately:

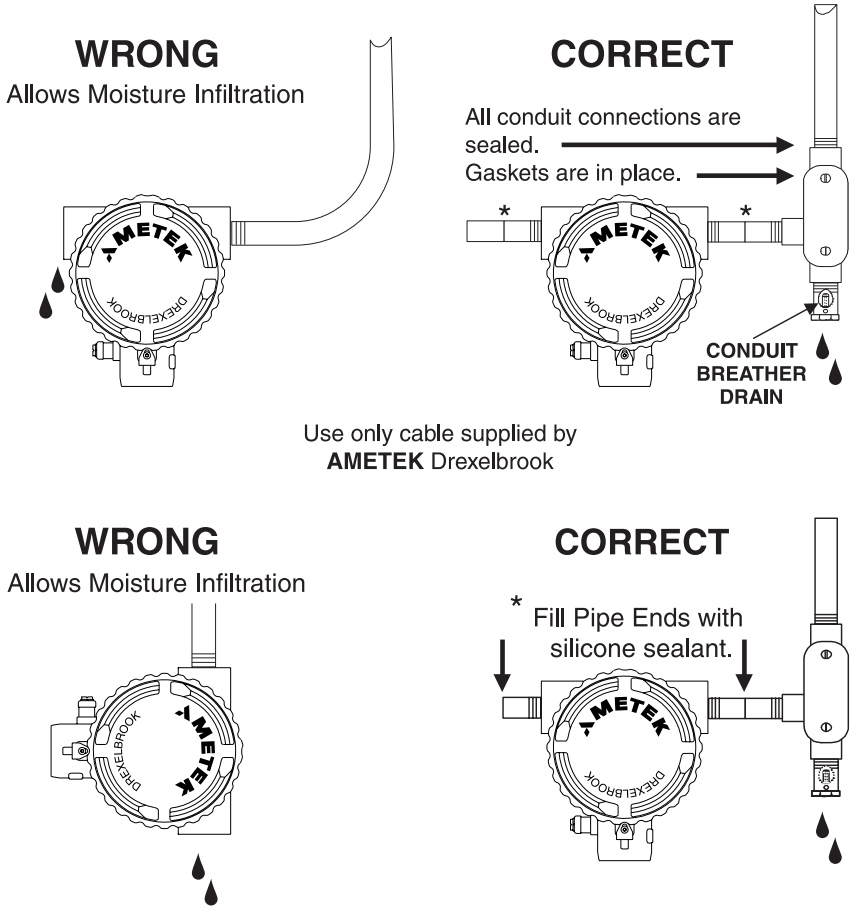

Figure 2-1
Recommended Conduit Installation

2.3 Mounting the Electronic Unit (Continued)

A. When Installing an insulated sensing element, use caution during installation to avoid damaging the insulation. Puncturing the insulation can render the system inoperable.

B. Sensing elements should be mounted so they are not in the direct stream of a filling nozzle / chute. If this is not possible, a direct baffle should be installed.

C. Do not take the sensing element apart or loosen the packing glands. Follow instructions in ***Figure 2-3.***

D. Avoid installing the sensing element with any of the common mistakes shown in ***Figure 2-4.***

E. If a stilling well is used, ensure that "vent" holes are large enough to allow free passage of both air and process material. The holes should be 5/8" or larger, 120° apart, and every 2-3 feet along the length of the stilling well.

F. Sensing elements that are mounted in agitated vessels may require brackets and supports to protect the sensing element from mechanical fatigue and ultimate failure. ***See Figure 2-5.***

G. For non-metallic vessels without Drexelbrook self-grounding sensing elements, choose one of the grounding recommendations shown in ***Figure 2-6.***

2.3 Mounting the Electronic Unit (Continued)

Integral System Mounting

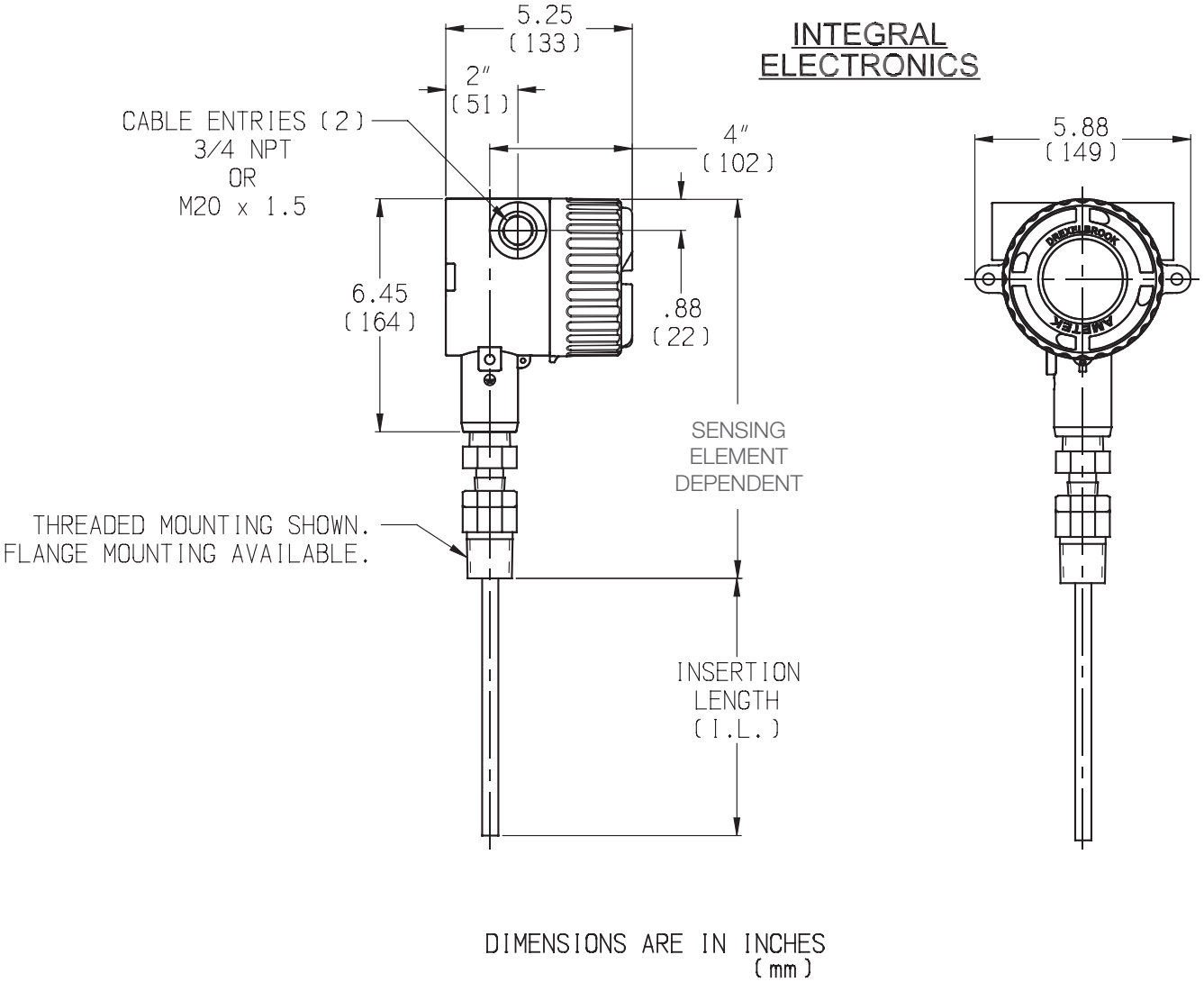

Figure 2-2
Integral Mounting Dimensions

2.3 Mounting the Electronic Unit (Continued)

Remote System Mounting

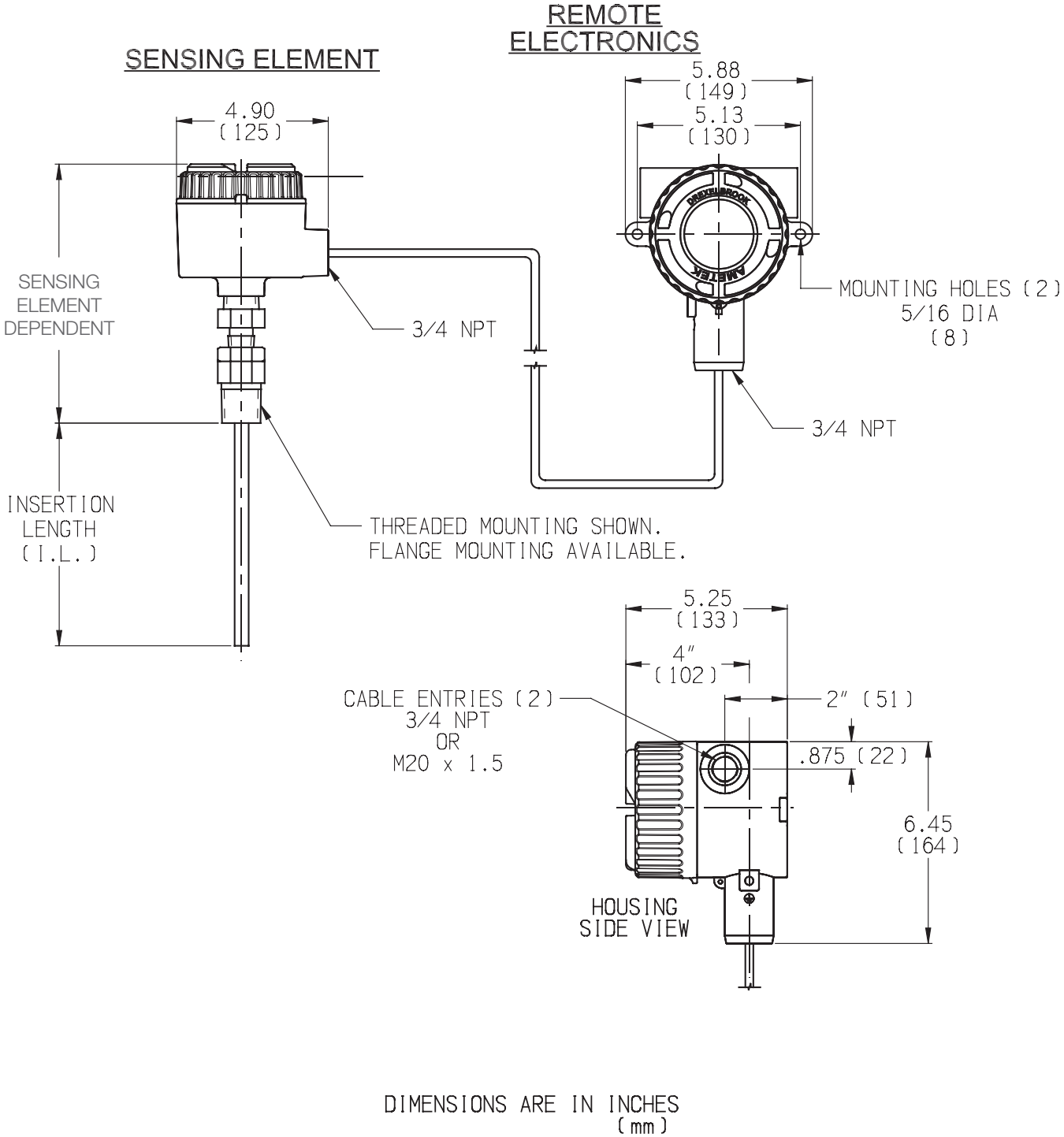

Figure 2-2-1
Remote Mounting Dimensions

2.3 Mounting the Electronic Unit (Continued)

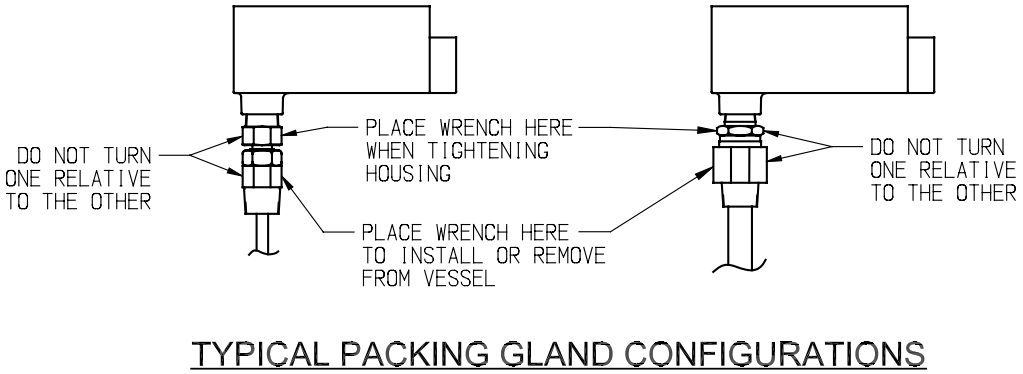

Figure 2-3
Installing Sensing Element

Figure 2-4
Common Installation Mistakes

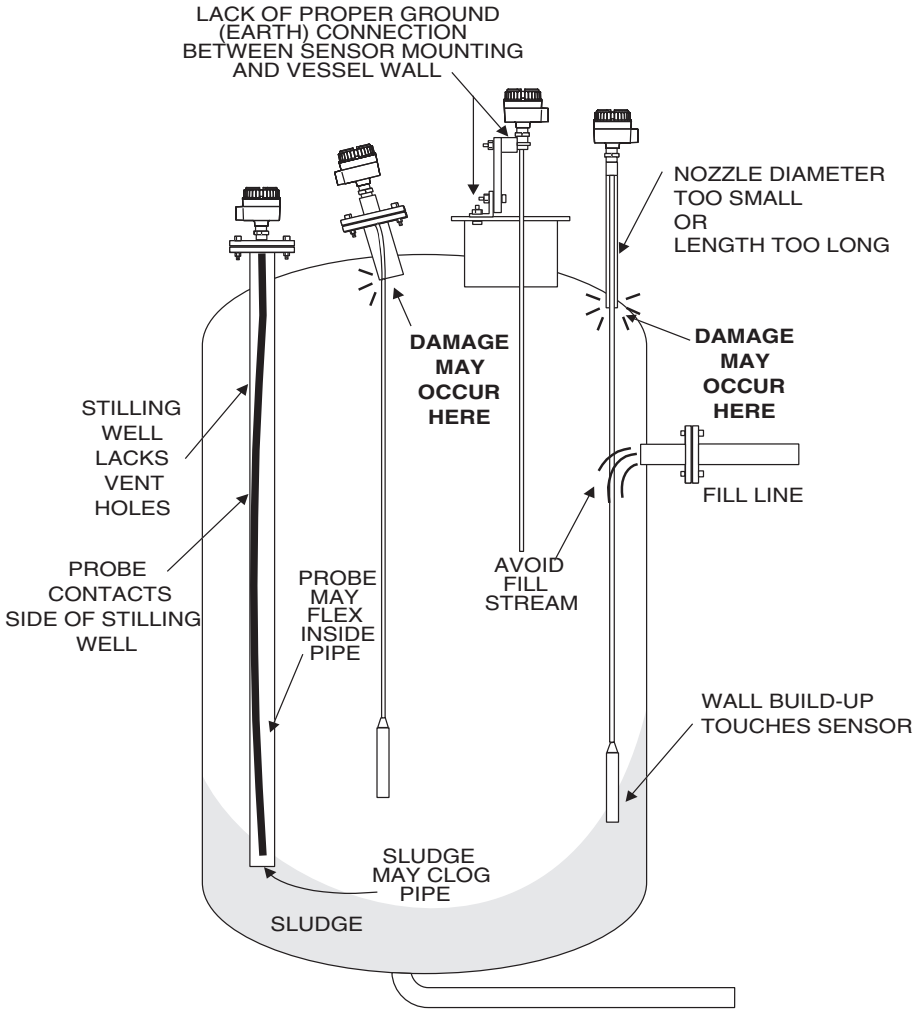

2.3 Mounting the Electronic Unit (Continued)

Figure 2-5 Installing Sensing Element in Agitated Vessel

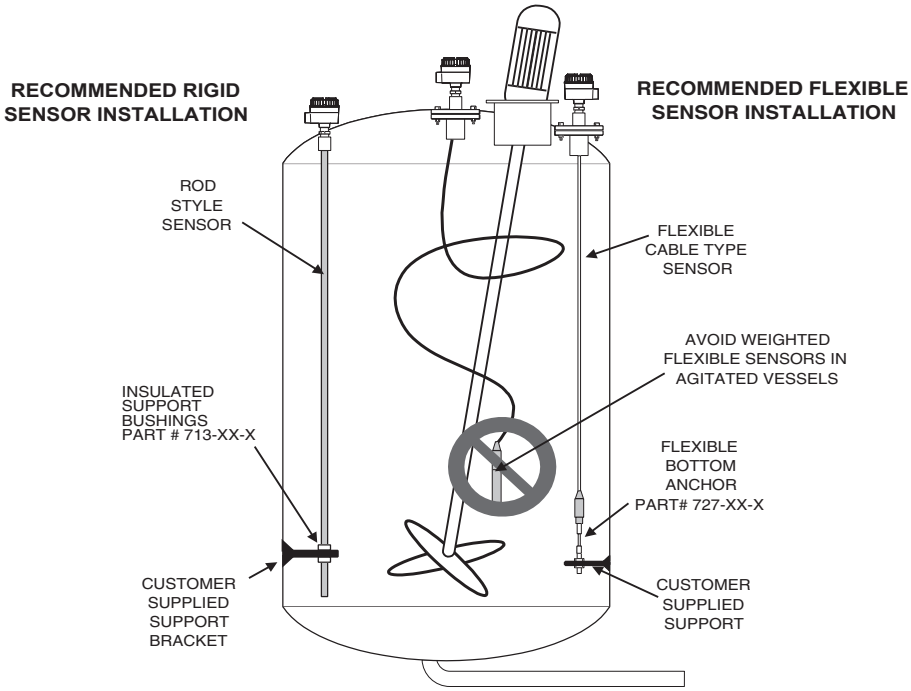

- If the vessel is non metallic see grounding sketch below. sensors with factory supplied concentric shield or ground rod do not need additional grounding.
- In metal vessels measure continuity from housing ground screw to metal wall of vessel. A good ground will measure less than 5 ohms.
- Ground element must be equal to or below the bottom of the sensing element

*Figure 2-6 Providing Ground Reference**

This is a sensing element ground reference and possibly different from an electrical power ground.

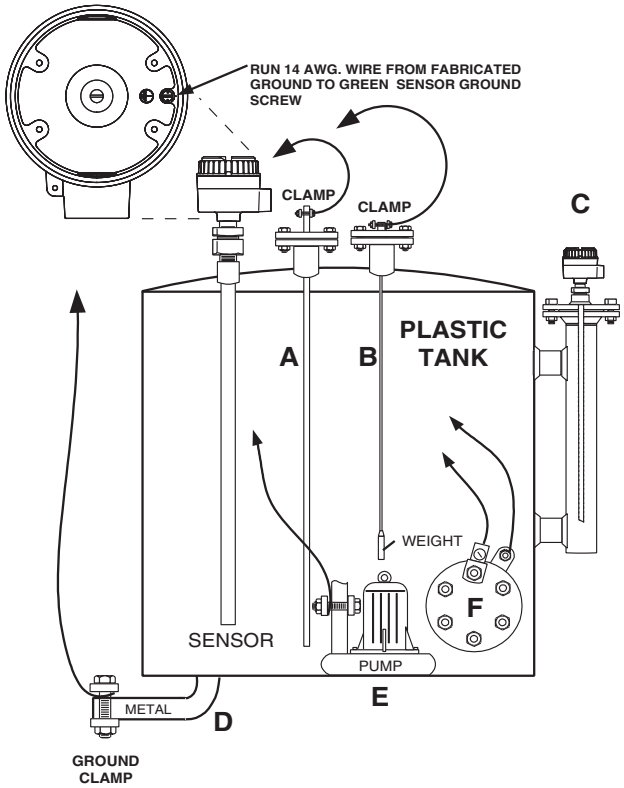

A
GROUND ROD
A ground rod can be fabricated out of any metal compatible with the process. Use material that is at least 3/8inch dia. such as pipe, All-Thread, or tubing. The ground rod must be parallel and relatively close to the sensor for insulating and low conductivity materials.

B
GROUND WIRE
1/4 inch or larger dia. stainless steel rope that is anchored or weighted can be used.

C
MOUNT SENSOR IN METAL PIPE
Mounting the level sensor inside a metal pipe provides an excellent ground reference.

D
METAL PIPING
Metal piping that connects to the tank bottom can be used as a ground reference. *Use only if the process material is greter than 1000 uMHOS/cm such as acids and caustic.*

E
SUBMERGED METAL STRUCTURE
Use any constantly submerged metal object such as: pumps, agitators, or thermowells. *Use only if the process material is greater than 1000 uMHOS/cm such as acids and caustic.*

F
METAL FLANGE
A submerged metal flange or orifice plate can be used.
Use only if the process material is greater thatn 1000 uMHOS/Cm. such as acids and caustic.

2.4 Wiring the Electronic Unit

The signal connections are made to the three-terminal block on the front of the chassis. Due to the low power consumption of the instrument, the wiring need only be light gauge (e.g. 20 AWG). Shielded twisted pair cables are recommended.

Integral units are pre-wired to the sensing element at the factory. ***Figure 2-7*** shows the wiring of the integral unit.

See Figure 2-8 for wiring connections of the remote unit. The cable from the sensing element is connected to the terminal strip below the instrument chassis. The cable connections are sensing element (prb) or center wire (cw), ground (gnd), and shield (shd).

CAUTION!
Before using Intrinsic Safety Barriers, read manufacturer's instruction for barrier operation.

The Universal IV has a built-in current limiter which holds the signal current to a maximum of 28 mA.

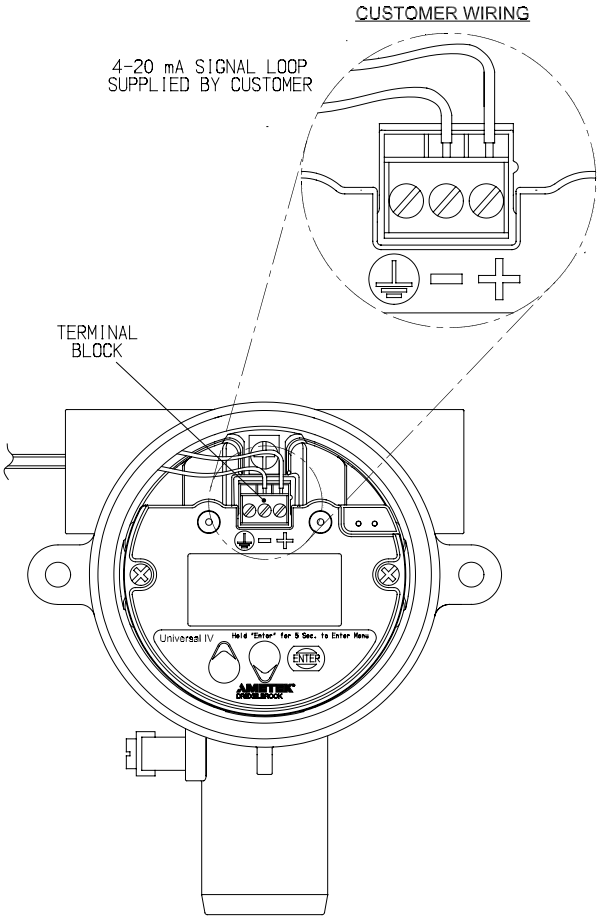

Figure 2-6.1
Universal IV Wiring Connections

2.5 Wiring the Sensing Element

The cable connections to the remote sensing element are shown in ***Figure 2-8***

- Do not connect the cable to the sensing element until after the sensing element has been installed in the vessel and the condulet / housing has been secured.

- If the sensing element does not have a shield connection, (the most common condition for a 2-terminal sensing element) be sure to clip and /or tape the shield wire at the sensing element end of the cable only. **See *Figure 2-8*.**

Only cables supplied by Drexelbrook should be used to connect the transmitter to the sensing element. Use of other cables can result in unstable performance.

Integral System Sensing Element Wiring

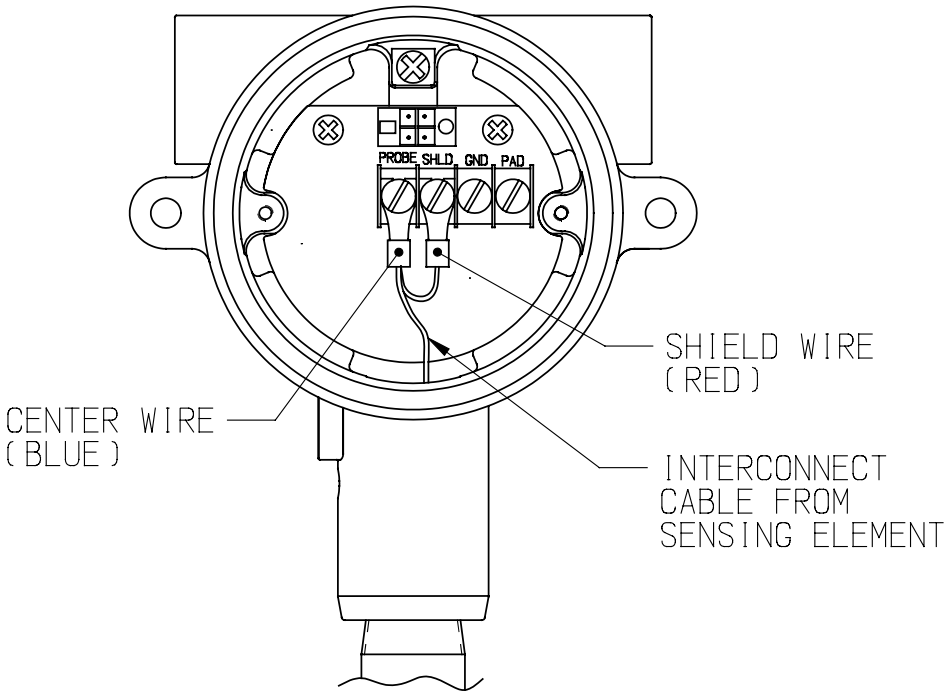

Figure 2-7
Universal IV Wiring Connections Integral Mounting

2.5 Wiring the Sensing Element (Continued)

Remote System Sensing Element Wiring

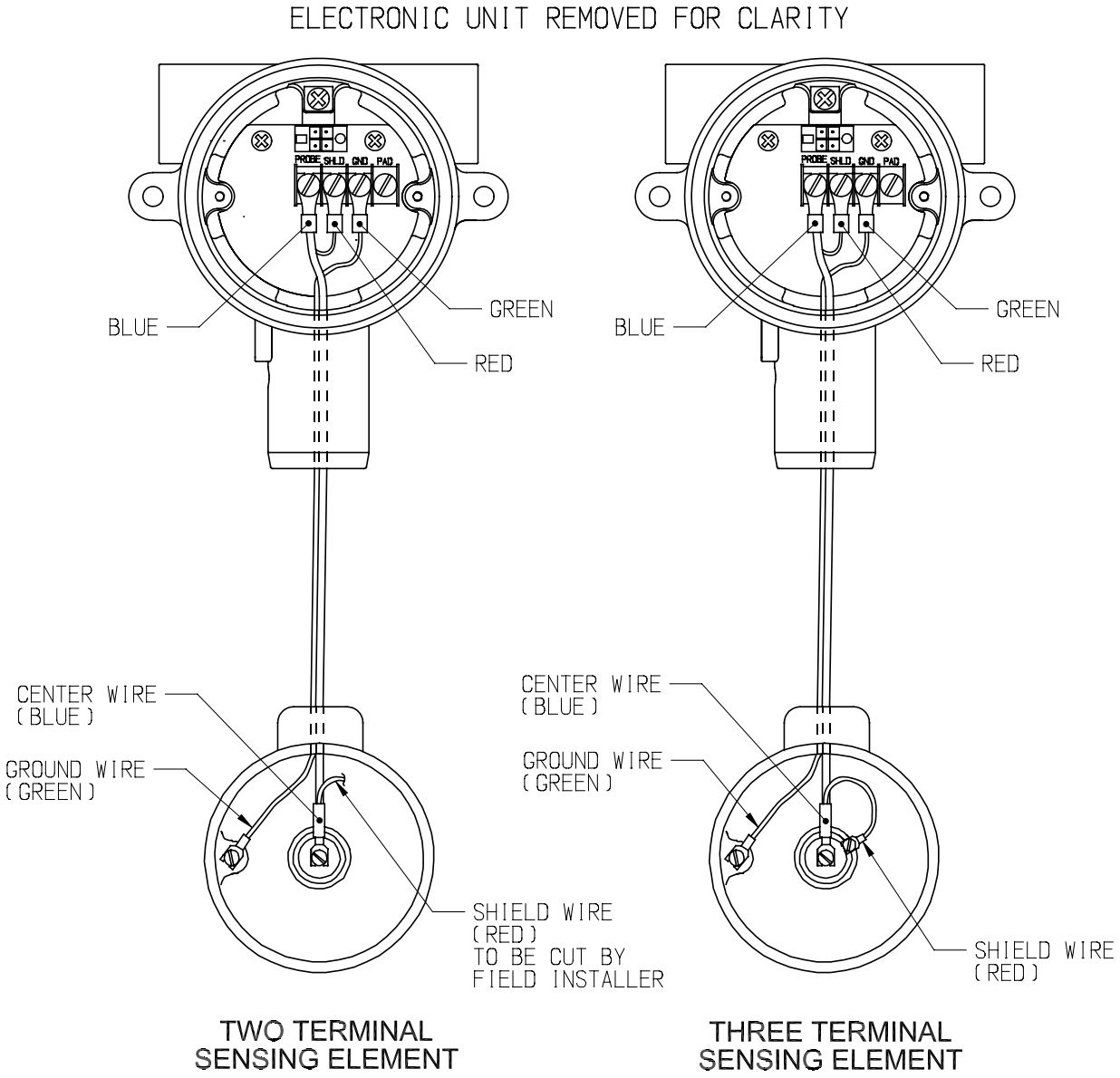

Figure 2-8
Universal IV Wiring Connections, Remote Mounting

2.6 Spark (Static Electricity) Protection

Spark protection is a standard feature of the sensing element circuit.

Spark Protection for Remote Sensing Elements

If additional spark protection is supplied for a remote sensing element, use the installation instructions provided with the spark protection. Below are instructions for our most common spark protector, Part # 377-0001-019.

A. Attach the mounting link on the spark protector to the sensing element center connection screw.

B. Connect the green wire from the spark protector to the ground screw.

C. Feed the coax cable into the condulet.

D. Connect the coax cable center wire (cw) to the spark protector and the ground wire (gnd) to the ground screw as shown in ***Figure 2-9***.

E. Connect the shield wire to the Cote-Shield terminal (sh).*

NOTICE

* For sensing elements that do not have shield connections, clip the shield wire as shown in ***Figure 2-8***.

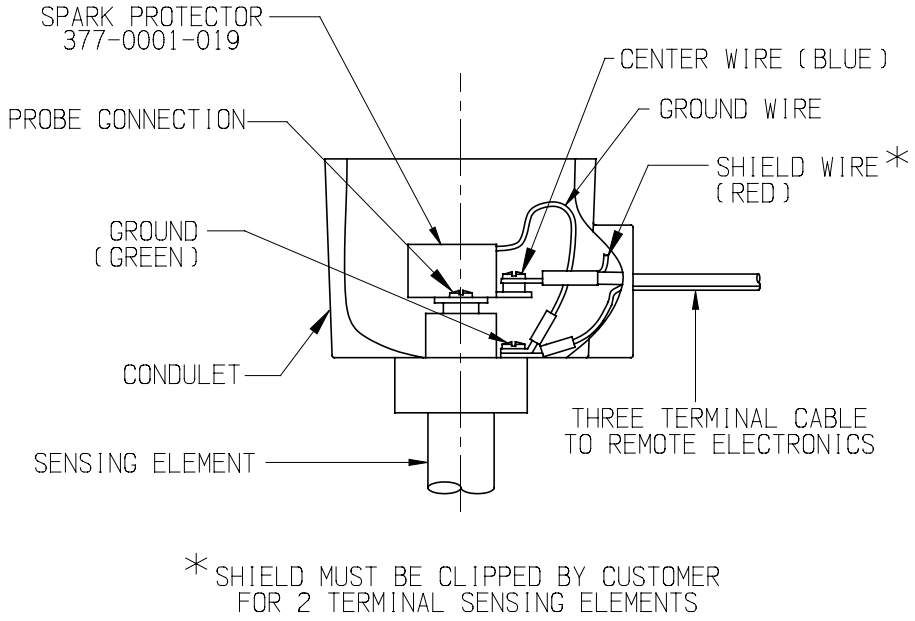

Figure 2-9
Spark Protection for Remote Sensing Elements

2.7 Surge Voltage (Lightning) Protection

Optional surge protection can be supplied with transmitters that are expected to be exposed to surge voltages or surges due to lightning near the two-wire loop. A Drexelbrook Model 401-0016-028 Signal Filter Assembly affords additional protection to the transmitter but is not absolute in its protection against a very close lightning strike. ***Refer to Figure 2-11.1*** to properly connect the Signal Filter Assembly. You must insure the transmitter housing is well connected to an earth ground.

2.8 RFI (Radio Frequency Interference) Filters

When installing the Universal IV transmitter, follow these recommendations to avoid problems with Radio Frequency Interference (RFI).

- Choose a location to mount the electronic unit at least 6 feet (2m) from a walkway where personnel using walkie talkies may pass.
- If the vessel is non-metallic, select, if possible, a shielded (concentric) sensor. If unsure about suitability, contact the AMETEK Drexelbrook Applications department for a recommendation.
- For remotely-mounted electronic units connect the sensor to the electronic unit by placing the coaxial cable in grounded metal conduit. Integrally mounted electronic unit sensor connections and triaxial cables are already shielded.
- Use Shielded Twisted Pair wiring for all loop wiring. Loop wiring should also be in grounded metallic conduit.
- Ground the electronic unit and housing with a minimum of 14 gauge wire to a good earth ground. Make sure that conduits entering and leaving the housing have a good electrical ground connection to the housing

If the recommendations listed are followed, it is usually not necessary to add RFI filtering to protect against signal strengths of 10 Volts/ Meter or less. This degree of protection is usually sufficient to protect against walkie talkies that are used 3 feet (1m) or more from a typical electronic unit. If greater protection is required, or filters have already been provided, install RFI filters as shown in ***Figure 2-11***.

2.8 RFI Filters (Continued)

CE Mark Certification:

Triaxial Cable - Systems with remote mounted electronics that connect to the sensing element via a triaxial cable do not need a sensing element RFI filter or metal conduit to maintain CE Mark certification.

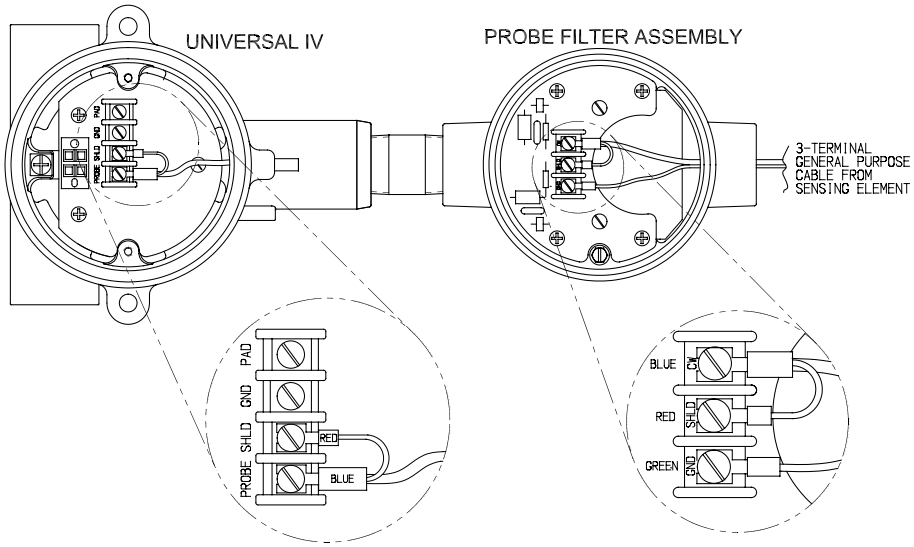

Figure 2-11
Sensing element Radio Frequency Interference (RFI) Filters
Part # 401-0016-029

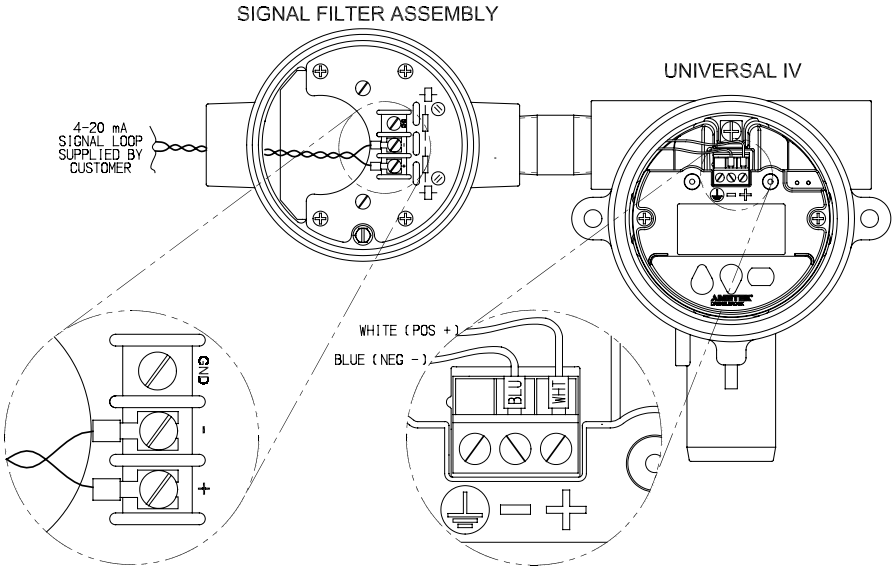

Figure 2-11.1
Signal Radio Frequency Interference (RFI) Filters / Surge Protection
Part # 401-0016-028

2.9 Electrostatic Filters (Desalter Filter)

In applications such as desalters, treaters and other coalescers with electrostatic grids, it is required to use a Drexelbrook supplied filter on the sensing element. The purpose of the filter is to remove voltage that may be imposed on the sensor from the high voltage grids. Some earlier models have a different style filter on the sensing element or the filter located at the transmitter instead of the sensing element; those must be replaced with the 401-0016-031.

Connect the electrostatic filter Drexelbrook Part Number 401-0016-031 as shown in ***Figure 2-12***.

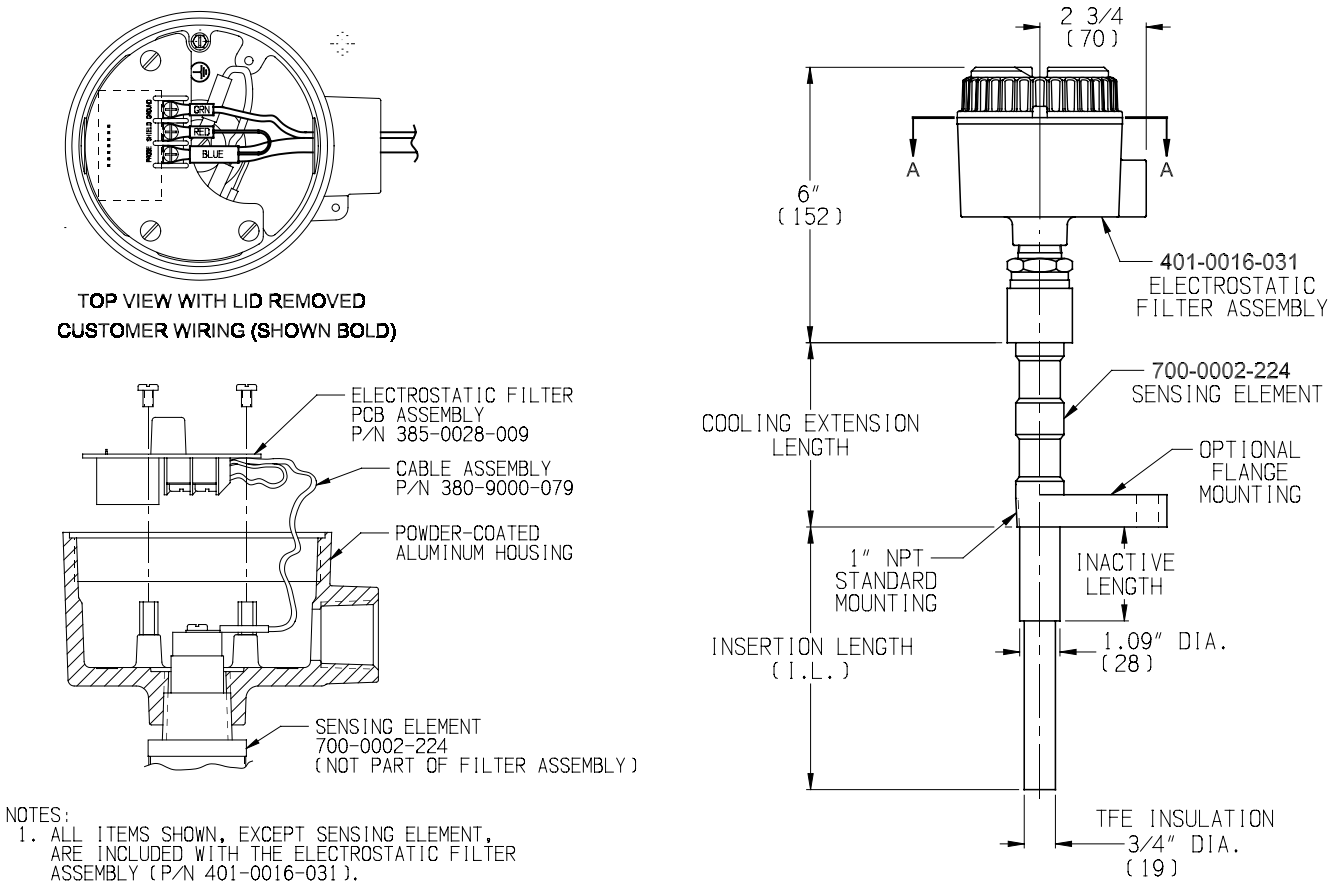

Figure 2-12
Electrostatic Filter Part # 401-0016-031

WARNING SHOCK HAZZARD!
High Voltage Grids Must be De-Energized Before Accessing Sensing Element Connections. Short probe and shield connections to ground prior to maintenance.

Section 3: Configuration and Calibration with Drexelbrook PC Software HRTWin

This section instructs the user how to use the AMETEK Drexelbrook PC calibrator software to configure and calibrate the Universal IV (RF Admittance) Transmitter.

3.1 Installing The USB Modem

HART® Modems are available from third party vendors. Refer to directions supplied by modem manufacturer.

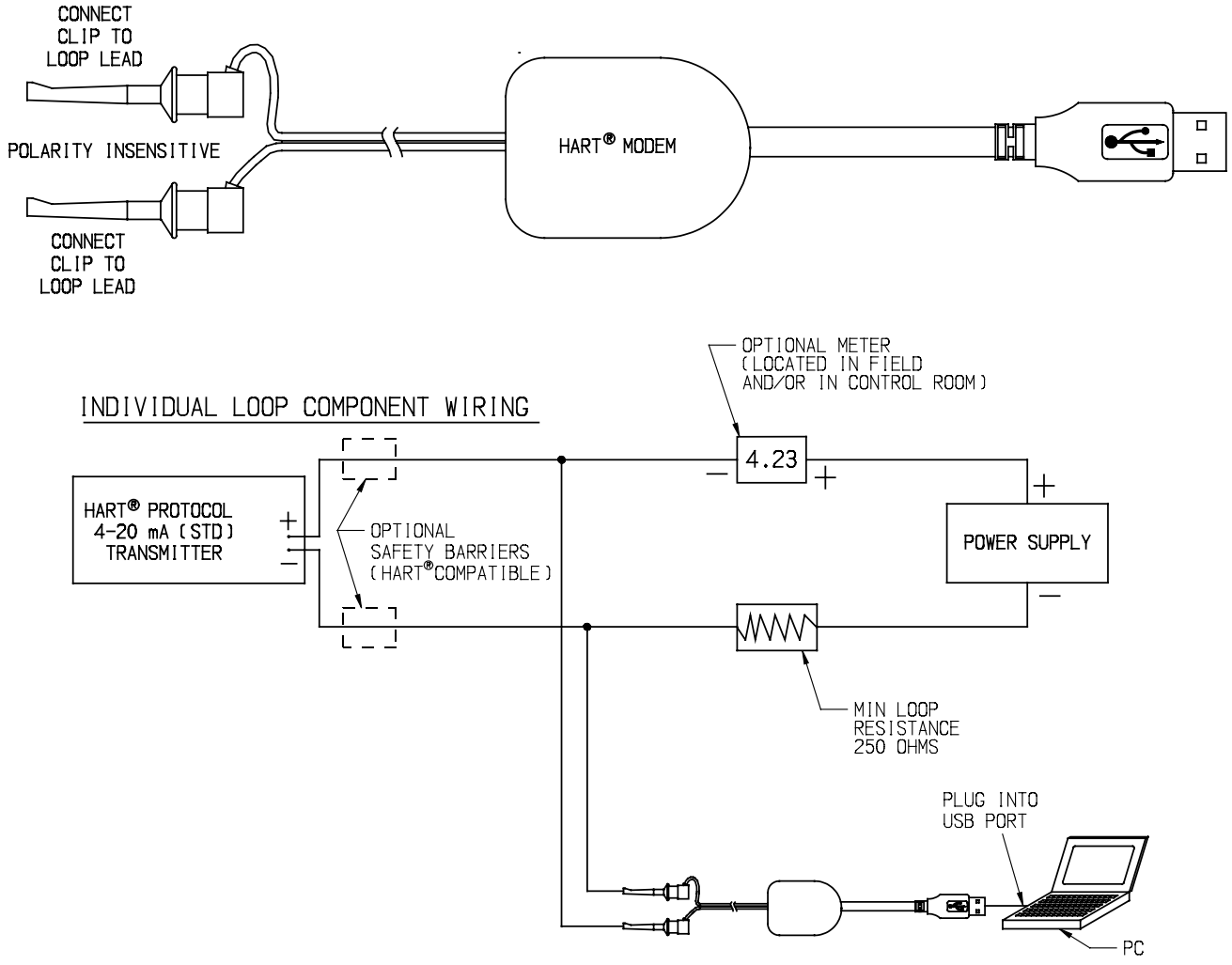

Figure 3-1
USB Modem Assembly & Loop Connection

3.2 Install the Windows Version HRTWin Software

Installation is quite simple.

A. Download the software from www.drexelbrook.com.

B. If program does not "Auto-Run", select the location where the file was saved and run the set-up program manually.

C. Follow "On-Screen" instructions in Setup to create program file.

D. Once loaded, double click "HRTWin" icon and the program will run under its own window.

E. Select communication port [Com 1, Com 2, etc.] and then click “OK.” ***See Figure 3-2.***

F. If you are not sure which communication port you are using (such as when first using a USB modem), select “Search Ports,” then OK. The software automatically will seek out the correct one. In either case the software begins to communicate with the HART protocol transmitter and returns with a view (below) containing “name plate data,” Tag ID and all default or existing configuration information. This is the same as if you clicked on the Read Transmitter function button.

G. The next view, shown in ***Figure 3-3***, appears automatically, displaying current transmitter database for calibration set-up for your selected Tag ID. The Scratch Pad will automatically show the last message (last user, last calibration, etc.) up to 32 characters. If this is a new transmitter, the Tag ID is user-defined. Serial number, transmitter software version, range, etc. is automatically entered from the “name plate data” embedded in the transmitter:

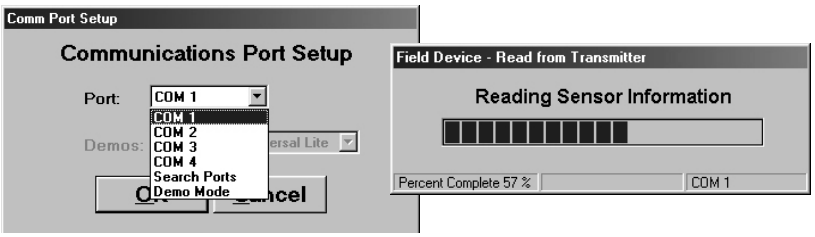

Figure 3-2
Selecting COM ports during software installation

3.2 Install the Windows Version HARTWin (Continued)

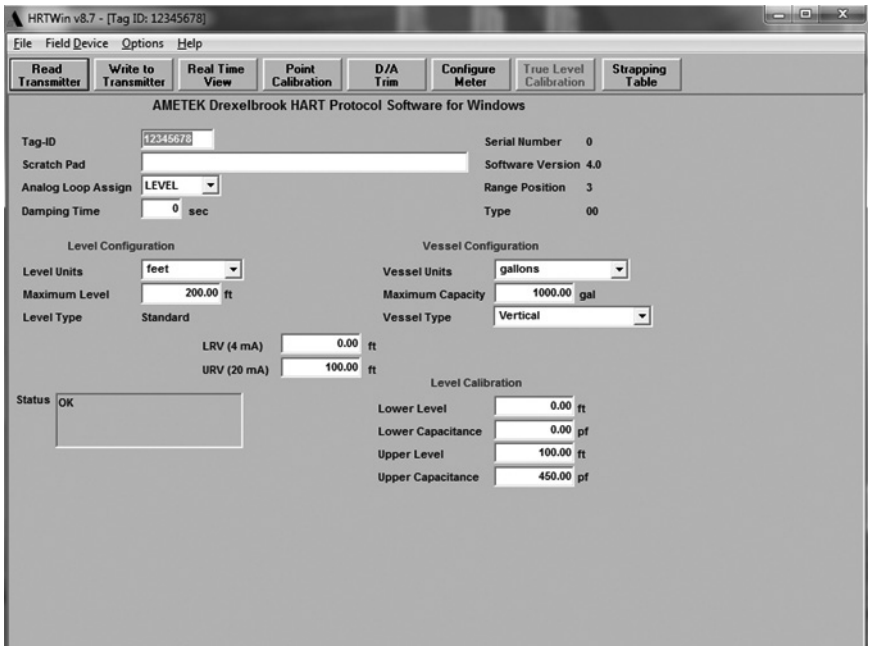

Figure 3-3
PC Software Menu Screen automatically communicates all "name plate data" from transmitter

3.3 Description of Function Keys

Figure 3-3 shows a PC calibration software menu screen. The following paragraphs describe the function buttons. The data fields are described in ***Section 3.4 Configuration.***

Read Transmitter [F3 on keyboard]
Reads all pertinent data from the transmitter and displays it on the screen. The Read function also updates the real time window. Keep in mind that it takes several seconds to load the information from the transmitter. When the load is complete, the screen shows the database parameters, except any user-defined strapping table information. This command is also used when connecting to another transmitter.

Write to Transmitter [F5 on keyboard]
Sends new or edited configuration data to the transmitter. Data fields that have been edited but not sent to the transmitter are displayed in red.

Real Time View [F4 on keyboard]
Displays the real time values of level, vessel (volume), capacitance, loop current, percentage (level or vessel as selected in "Analog Loop Assign" field) and status.

3.3 Description of Function Keys (Continued)

Point Calibration [F6 on keyboard]
Calibrates the HART® protocol transmitter using known levels. ***See Section 3.5 Calibration***. Enter the low point and high point of level for an accurate calibration.

D/A Trim
Allows a field reference meter to be connected to the transmitter for adjusting transmitter output current.
See Section 3.7.

Strapping Table
Displays the values of the input to level and output to volume in percent in a 21-point table. Allows points to be changed to accommodate irregularly shaped vessels.
See Section 3.8.

3.4 Configuration

Refer to ***Figure 3-3*** PC Software Menu Screen.

Configuration involves downloading information to the HART protocol transmitter that is specific to the application and vessel that is being measured.

Calibration requires that application information and two points of level and/or capacitance be supplied to the transmitter from the calibration software.

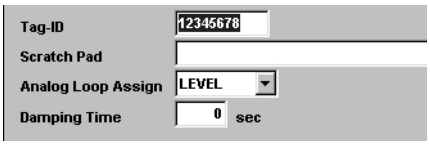

Figure 3-4
Configure Transmitter from Menu screen

3.4 Configuration (Continued)

A. Begin configuration by using Tag ID (8 characters) to identify the unit or vessel. Use the Scratchpad (32 characters) to record the date of calibration or other similar notes. Press Tab or Enter on your keyboard.
B. Select Level or Vessel in the Analog Loop Assign selection box. Press Tab or Enter on your keyboard.

- Level configuration sets the output to follow the level of the material being measured.
- Vessel configuration sets the output to follow the strapped volume in the vessel. For example, gallons in a horizontal vessel.

Note: Changing between Level and Volume will automatically change the LRV value to 0 and the URV to the maximum level or maximum capacity as appropriate.

C. Edit Damping Time from 0-90 seconds, if desired.
D. Click on Write to Transmitter.
E. Move to Level Configuration section of menu.

3.4.1 Level Configuration

A. Select Level Units. The default is feet. Choose the units that correspond to the level measurement.

Note: Changing Level Units will automatically convert unedited entries for maximum level, LRV, URV, lower level and upper level to the new units when the change is written to the transmitter. For example: Changing from feet to inches will automatically multiply all entries by 12 unless they have been manually edited.

B. Edit the Maximum Level to agree with the sensing element length or the actual tank height if referencing vessel dimensions for output. For an accurate volume conversion the maximum level must equal the tank height.
C. Click on Write to Transmitter and move to the Vessel Configuration section of the menu.

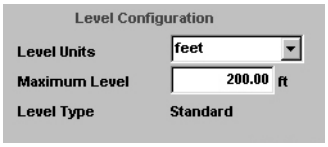

Figure 3-5
Level Configuration from Menu screen

3.4.2 Vessel Configuration - Optional

A. Select Vessel Units. The default is gallons. Press Enter and choose the units that correspond to the vessel measurement. Press Tab or Enter on your keyboard to continue.

Note: Changing vessel Units will automatically convert unedited entries for maximum capacity, for LRV, and URV to the new units when the change is written to the transmitter. For example: Changing from gallons to liters will automatically multiply all values by 3.785 unless they have been manually edited.

B. Edit the Maximum Capacity of the vessel. Enter the corresponding value of weight or volume equal to the Maximum Level. Enter 100 for percent if the weight or volume units are not known or needed. Press Tab or Enter on your keyboard to continue.

C. Select Vessel Type. Available options include:

- Vertical Tank (Vertical)
- Horizontal cylinder with flat ends (HCyl-Flat Ends)
- Horizontal cylinder with dished ends (HCyl-Dished Ends)
- Horizontal cylinder with hemispherical ends (HCyl-Hemisphere Ends)
- Spherical (Sphere)
- The default is Vertical. Press Enter and choose the type of vessel.

D. Click on Write to Transmitter.

E. Move on to Range Values (URV & LRV) section of menu.

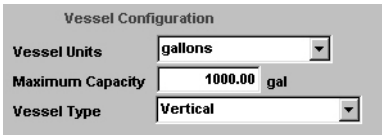

Figure 3-6
Vessel Configuration from Menu screen

3.4.3 Lower and Upper Range Values (LRV and URV)

Enter the LRV and URV to set the current (mA) window of the vessel. Units will automatically change to reflect volume if "Vessel" was selected in Section 3.4 (B).

A. Edit LRV (Lower Range Value) to display the output you want to see when the transmitter generates 4 mA current. The default LRV is 0 feet.

B. Edit URV (Upper Range Value) to display the output you want to see when the transmitter generates 20 mA current. The default URV is 100 feet for the Universal IV.

C. Click on Write to Transmitter. Configuration is now complete.

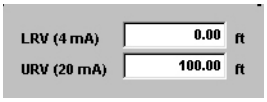

Figure 3-7
LRV & URV Configuration from Menu screen

3.5 Calibration

There are two methods for calibrating the transmitter using the
PC software:

Point Calibration (menu button selection):
Uses two known level points in the vessel for calibration. The further apart the two points are for the calibration the better the accuracy of the overall measurement. Always initiate the point calibration process by selecting the Point Calibration button on the PC menu screen and following the prompts in the pop-up window.

Capacitance Calibration:
***See Figure 3-3* (lower right of window)**
Uses capacitance values obtained from the AMETEK Drexelbrook Service department (or a previous calibration or identical application) for the zero and span calibration data. Call 1-800-527-6297. Please FAX Bench Calibration Information Sheet (***Section 4.5***) to 215-443-5117. Level calibration is done using the Level Calibration data fields on the PC menu screen.

3.5 Calibration (Continued)

It is permissible or sometimes even recommended that both methods be used in order to establish a calibration standard. For example, if the vessel was already filled before the calibration was attempted and it is difficult or impossible to lower the level to establish the second point, it would be best to use a calculated zero capacitance for the low point and actual level for the high point. While this wouldn't be as accurate as two known level points, it will be reasonably accurate until an actual low point calibration can be established. The Service department will help in calculating high or low capacitance values.

3.5.1 Point Calibration

The Two Point method of calibration is the most accurate way to calibrate the transmitter with two level points. The current level must be known and should be held steady for accurate calibration. They may be any two points at more than 10% apart, and need not be the 4mA or 20 mA points.

The Point Calibration pop-up window is accessed by clicking on the menu "button" Point Calibration. Either a high point or a low point can be entered first.

A. Type in the current level value as the high point of the two point calibration.
B. Click on Hi Point or press Enter (or Tab) on the keyboard. High point calibration is now complete.
C. Lower level in vessel a minimum of 10%.
D. Type in that the current level for Low Point of the two point calibration.
E. Click on Low Point or press Enter (or Tab) on keyboard. Low point calibration is now complete.

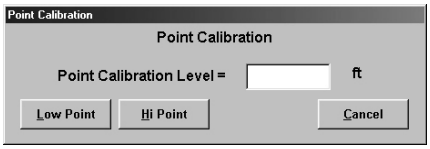

Figure 3-8
Point Calibration from Menu screen

3.5.2 Capacitance Calibration

Level calibration uses zero and span capacitance values as the calibration data . These values can be obtained from the AMETEK Drexelbrook Service department (or from a previous calibration or identical application). Please be prepared when you call (1-800-527-6297) with the purchase order number and the serial number of the transmitter.

A. Go to Level Calibration area of the menu.
B. Enter Lower Level value. Press Tab or Enter.
C. Enter Lower Capacitance value. Press Tab or Enter.
D. Enter Upper Level value. Press Tab or Enter.
E. Enter Upper Capacitance value. Press Tab or Enter.
F. Click on Write to Transmitter.

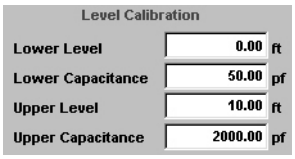

Figure 3-9
Level Calibration area of Menu screen

3.5.3 Application Example

Example of an application using the PC software. (Application Data) ***See Figure 3-10.***

- Vertical Tank
- No Damping
- Caustic or Acid Material in Tank Sensing Element: 700-0005-054.
- Maximum Capacity of Vessel = 1200 gallons
- Maximum Size of Vessel = 20 feet
- 4 mA (LRV) = 0 gallons
- 20 mA (URV) = 1170 gallons [19.5 feet]
- Point Cal was done using two known level points:
- Lo Cal = 3 feet [selected level]
- Hi Cal = 16 feet [current level]

3.5.3 Application Example (Continued)

Figure 3-10
Application Example Diagram

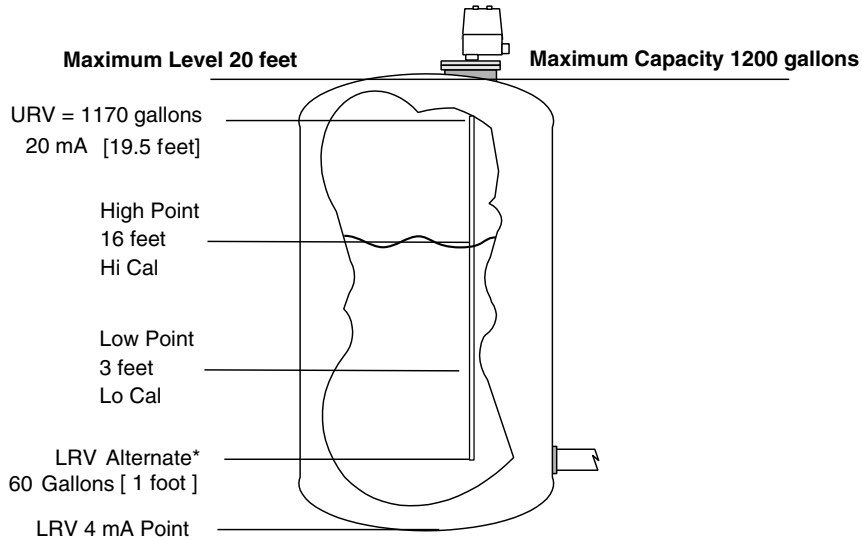

*LRV may either reference the bottom of the vessel,
bottom of the sensor, or any point in the vessel.
For Volume Measurement always use Tank Dimensions (Bottom) for LRV

Figure 3-11
PC Software Menu Screen View of Application Example

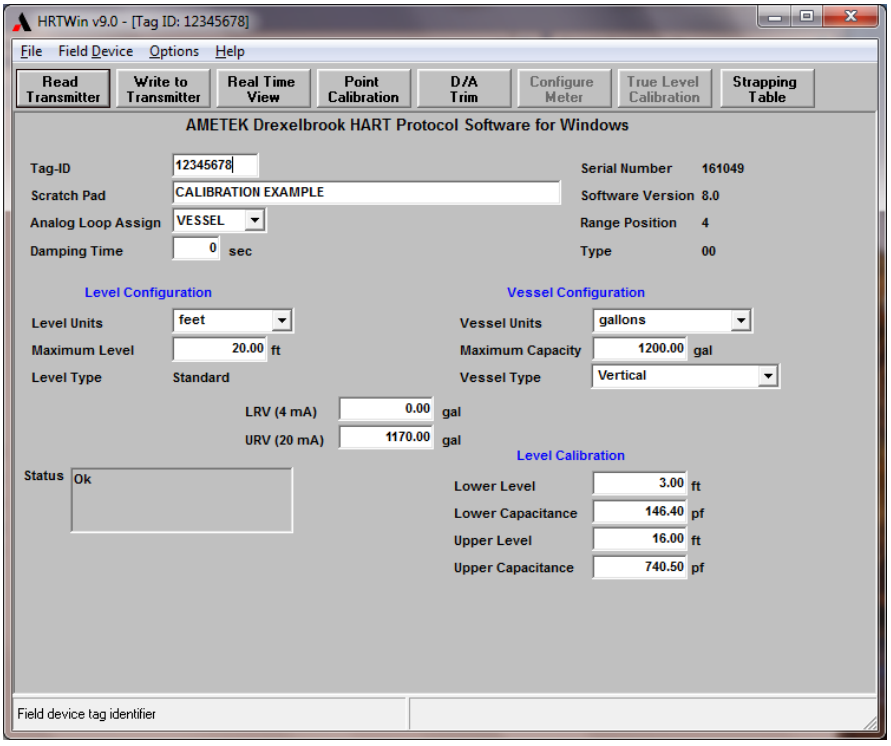

3.6 Set D/A Trim

D/A Trim is NOT a system calibration! This is a pre calibrated alignment to precision factory settings and is rarely in need of change. The procedure is intended only as a slight "meter" adjustment to a known external reference.

The Digital to Analog (D/A) Trim adjusts the transmitter mA (current) output. Since the smart transmitter performs a digital to analog conversion, there may be a discrepancy in the 4-20 mA output loop as measured with a reliable external milliampere meter.

For example: After calibration you observe that the tank is empty and a hand-held mA meter reads 3.94 mA, while the Real Time View in the PC Menu shows 4.00 mA. By adjusting the D/A trim, you may digitally manipulate the output current to equal 4.00. You may also wish to adjust the high end to 20.00 mA.

To make these adjustments, click on D/A Trim on the PC software Menu Screen and follow the pop-up window instructions:

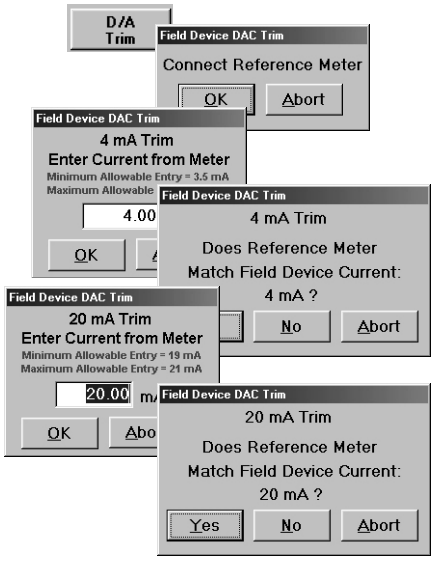

Figure 3-13
Setting D/A Trim Menu Screen "Pop-Ups"

3.7 Strapping Table

The strapping table is a 2-point to 21-point table used by the Universal IV to cause the output current to follow a specified relationship to the level. There are certain strapping tables that are already built in to the transmitter software. These are: Linear (vertical tank); Horizontal Tank with flat ends; Horizontal Tank with dished ends; Horizontal Tank with hemispherical ends; and Spherical Tank. These predefined tables are automatically created by selections made with Vessel Configuration assignments during Configuration procedure in ***Section 3.4.2***, and viewed by clicking the **Strapping Table** "button" on the Main menu.

If the output-to-level relationship is not defined by one of these tables, you may create a table in the Strapping Table program. To create a non-linear relationship, you will need at least 3 points and may use as many as 21 points. A 21-point table will define the relationship with more accuracy. A common example for a simple table would be a Cone Bottom Vertical tank which would require 3 points—the bottom, straight-side break point, and the top. On the other hand, an open channel flow application could benefit from using all 21 available points.

A. Plan your table by filling out table 3-2. You may use the first column which lists every 5% between 0 and 100%, or you may fill in your own values in column 2.

B. Fill out column 3 with output values corresponding to those listed in column 1 or 2.

C. "Click" on **Strapping Table** button to access table:

D. Enter the values you calculated into the screen view presented.

E. "Click" on **Write Strapping Table**.

F. "Click" on **Exit** when completed.

3.7 Strapping Table (Continued)

Table 3-1
Universal IV
Strapping Table

Point Number	Level Standard Preset Values % Level	Level Optional Values % Level	Output Value In Selected Units
1.	0		
2.	5		
3.	10		
4.	15		
5.	20		
6.	25		
7.	30		
8.	35		
9.	40		
10.	45		
11.	50		
12.	55		
13.	60		
14.	65		
15.	70		
16.	75		
17.	80		
18.	85		
19.	90		
20.	95		
21.	100		

Figure 3-14
Menu Screen Transforms
to Strapping Table

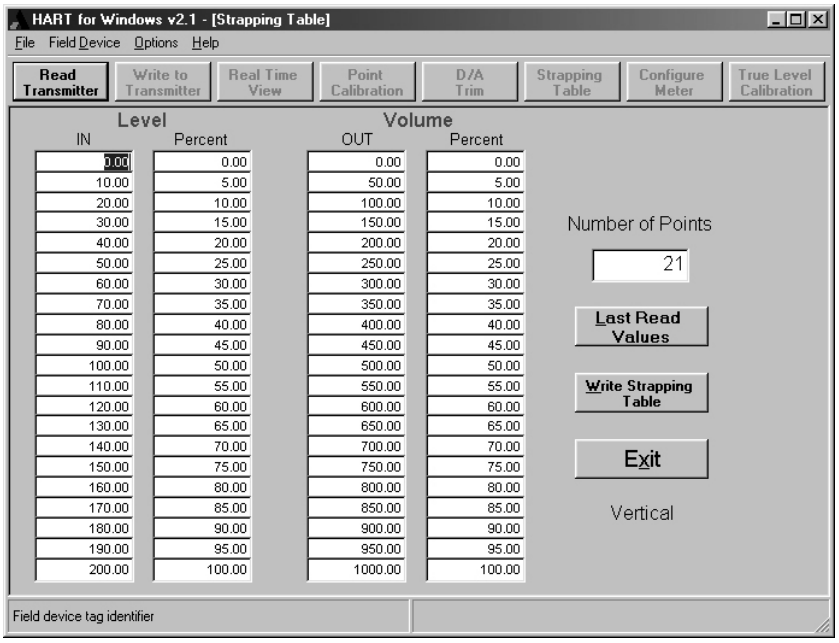

NOTICE

By clicking on Last Read Values, this view may also be used to review existing strapping tables previously entered.

3.8 Save/Print Entries

In addition to your own convenience, many regulatory agencies are requiring a record of the values being used during certain processes. All of the values developed in this configuration and calibration procedure may be saved to be reloaded into another (or replacement) transmitter. All of the values may likewise be printed out as hard copy, including the Serial Number, transmitter software version, Tag ID, Scratch Pad, Level and Vessel Configurations, Level Calibration, all of the Real Time View numbers, and all of the Strapping Table entries.

Pop-up screens come from selections in the **FILE** pull down at the top left of the PC menu Screen.

The file will download into a transmitter through the **OPEN** command. The text file may be printed out, or reformatted.

PRINT command provides a pre-formatted hard copy.

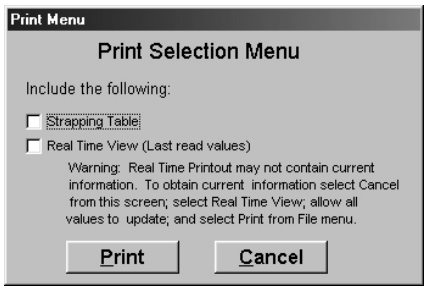

Figure 3-16
Print Pop-up from Menu

3.9 Validation

More and more industries are requiring formal validation of their processes for their customers as well as for various government regulatory agencies. The Universal IV Transmitter has this capability built in.

3.9.1 Validation Design Concept

Smart RF Continuous Level systems derive their input information from a sensing element that provides a capacitance value to the RF Transmitter. The RF Transmitter output signal is derived from this capacitance value, based on the capacitance span of the transmitter during initial calibration.

If the RF Transmitter's minimum and maximum capacitance values are known, and remain unchanged, the effect of a specific capacitance value within this range can be accurately predicted. If a known capacitance (which can be NIST-traceable) within this range produces repeatable results and the minimum and maximum values remain unchanged the RF Level system can be assumed to be operating correctly.

With a known capacitance input, the output signal would not be repeatable if the calibration information is altered, or if the RF transmitter was not operating within specifications. Repeatable calibration information can be maintained through the use of the Save/Print capability built into the Universal IV Transmitter.

3.9.2 Validation Procedures

A. Drexelbrook Laptop software must be used. Connect the laptop to the smart level transmitter signal loop to be validated and start the software according to the instructions provided at the beginning of this ***Section 3***.

B. At the Main configuration screen observe the **Level Calibration, Lower Capacitance,** and **Upper Capacitance** values and the **Lower Level** and **Upper Level** values. Select an NPO Capacitor (which can be NIST traceable, if desired or required) that falls somewhere mid-range. **Example:** ***See Fig. 3-17.*** If Lower Capacitance is 50pF and Upper Capacitance is 2000pF, that corresponds to a Lower Level and Upper Level of 0-10 feet. Select an NPO Capacitor of approximately 1000pF. [Drexelbrook 401-0006-008 Capacitor Substitute Box may also be used; it is traceable to NIST].

3.9.2 Validation Procedures (Continued)

C. Connect the NPO capacitor selected from the last step to the **Sensing Element** and **Ground** connections at the transmitter (with coaxial cable from sensing element disconnected).

D. Select **Real Time View** on the PC software Menu Screen (F4 on your keyboard) ***See Fig. 3-18***. The display should show the Capacitance as the value of the NPO Capacitor (within the capacitors tolerance), and the **LEVEL** should display close to the mid-range of the Lower and Upper Level from the **Level Calibration** field. The **Loop Current** and the **Percentage** will also reflect the values that are generated by the NPO Capacitor. Add to the scratch pad of the Menu Screen the value of the NPO capacitor that you used. If desired, this information can be printed out for file or record purposes ***See Fig. 3-18.*** Mark or Tag this capacitor* to correspond to this specific transmitter. Put the capacitor in a safe location for use in subsequent testing and validation.

E. By placing the same exact capacitor* on the RF transmitter's **Sensing Element** and **Ground** terminals and observing the signal output generated by this capacitor, it can be verified that the transmitter is operating properly and that the calibration information is the same as during the initial set up.

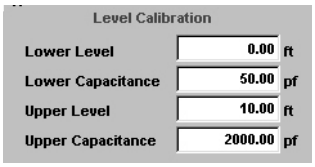

Figure 3-17
Capacitance on Menu Screen

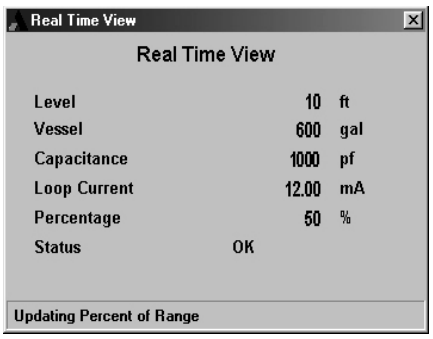

Figure 3-18
Real Time View Pop-up from Menu Screen

NOTICE

* Every capacitor manufactured will generate a slightly different capacitance value within its specified tolerance. By marking the capacitor and using only this capacitor for testing and validating the AMETEK Drexelbrook Universal IV Transmitter, the system will produce repeatable results within transmitter specifications.

3.9.3 Validation Results

If the information that is shown (or printed) matches the initial readings within system specifications, then it can be verified that the calibration and configuration is as originally set. It can also be verified that the transmitter's response falls within acceptable tolerances. The system has passed validation tests. Using the Save/Print feature built into the transmitter allows the ability to comply with the record-keeping needed for many processes by regulatory agencies.

AMETEK Drexelbrook
205 Keith Valley Road
Horsham, PA 19044
Telephone: 215-674-1234
FAX: 215-443-5117
Service: 800-527-6297

Tag-ID:	LT 101	Serial Number:	1172
Scratch PAD:	1000 pf NPO validation capacitor	Software Version:	3.1
Analog Loop Assign:	LEVEL	Range Position:	4
Damping Time:	0 sec.	Type:	30

Level Configuration		Vessel Configuration		Level Calibration	
Level Units:	feet	Vessel Units:	gallons	Lower Level:	0 ft
Maximum Level:	10.00 ft	Maximum Capacity:	1200.00 gal	Upper Level:	10 ft
Level Type:	Standard	Vessel Type:	Vertical	Lower Capacitance:	50 pf
				Upper Capacitance:	2000 pf
		LRV (4mA):	0.00 ft		
		URV (20 mA):	10.00ft		

Real Time View

Level:	10 ft
Vessel:	600 gal
Capacitance:	1000 pF
Loop Current:	12.00 mA
Percentage:	50 %
Status:	OK

Strapping Table

Vessel Type: **Vertical**
Number of Points: **21**

Level		Volume	
In	Percent	Out	Percent
0.00	0.00	o.oo	0.00
1.00	5.00	60.00	5.00
2.00	10.00	120.00	10.00
3.00	15.00	180.00	15.00
4.00	20.00	240.00	20.00
5.00	25.00	300.00	25.00
6.00	30.00	360.00	30.00
7.00	35.00	420.00	35.00
8.00	40.00	480.00	40.00
9.00	45.00	540.00	45.00
10.00	50.00	600.00	50.00
11.00	55.00	660.00	55.00
12.00	60.00	720.00	60.00
13.00	65.00	780.00	65.00
14.00	70.00	840.00	70.00
15.00	75.00	900.00	75.00
16.00	80.00	960.00	80.00
17.00	85.00	1020.00	85.00
18.00	90.00	1080.00	90.00
19.00	95.00	1140.00	95.00
20.00	100.00	1200.00	100.00

Figure 3-19
Typical Printout of Transmitter Data

3.10 Calibration & Configuration via Display/Keypad

To enter the Configuration Menu:

- Press and Hold the "Enter" Button for approximately 5 seconds.
- Use the "Up" and "Down" Buttons to scroll through the available menu selections.
- Press "Enter" to access sub-menu items.
- Use the "Up" and "Down" Buttons to adjust settings.
  Settings that can be adjusted will be "flashing".
- Press "Enter" to accept the adjustment...Or...
- Press and Hold the "Enter" Button for approximately 5 seconds to exit to the previous menu level.

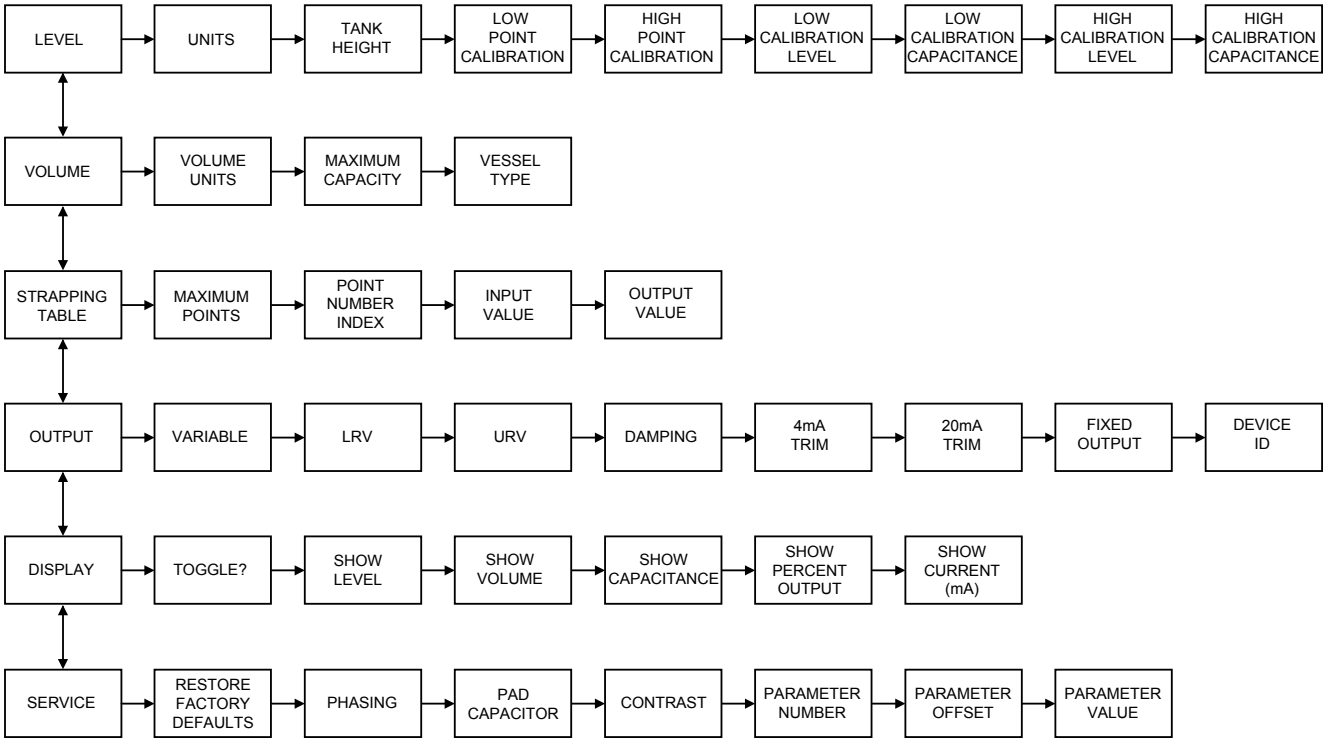

3.10 Calibration & Configuration via Display/Keypad (Continued)

Menu Function (display abbreviation)	Valid values	Description
Fct 1.00 **Level** **(LEVEL)**		You must start with this level menu to configure and calibrate the Univesal IV device. 'Level' is defined as the distance from the tank bottom to the level of the material. Two calibration points are required to configure the unit. 'Point Cal' requires an actual level to be present in the vessel. 'Calculated Level' is a predetermined calculated value that is independent of the level in the vessel. The user can mix and match 'Point Cal' and 'Calculated' (i.e. two 'Point Cal', two 'Calculated level', 'High Point Cal' and 'Low Calculated Level' or vice versa)
Fct 1.01 **Units** **(UNITS)**	Feet (FEET) - default	Setup level units in feet
	Inches (INCHES)	Setup level units in inches
	millimeters (MM)	Setup level units in millimeters
	centimeters (CM)	Setup level units in centimeters
	Meters (METERS)	Setup level units in meters
Fct 1.02 **Tank height** **(TANK HT)**	200 feet (DEFAULT)	Enter the tank height from the bottom to the top of the tank in level units selected above. This entry is required for volume conversions only.
	Greater than 0	Example: For a 20 foot tall tank '20' will be entered if 'Feet' was selected as the level unit above or "240" will be entered if "Inches" was selected
Fct 1.03 **Low Point Cal** **(PCAL LO)**	0 feet (DEFAULT)	Enter your current low level value in your vessel. You must know the actual level before performing a 'Point Cal' calibration. Entering a value above the "High Point Cal" will invert the output.
	0..No upper limit	In level units selected above
Fct 1.04 **High Point Cal** **(PCAL HI)**	100 feet (DEFAULT)	Enter your current high level value in your vessel. You must know the actual level before performing a 'Point Cal' calibration. Entering a value below the "Low Point Cal" will invert the output.
	0..No upper limit	In level units selected above. 'High Point Cal' and 'Low Point Cal' must be at least 10% apart.
Fct 1.05 **Low Calibration Level** **(LOW LVL)**	0 feet (DEFAULT)	Display actual value from Fct 1.03 or edit to change to a calculated value. The level in the vessel does not have to change if you are entering a calculated value. This step is typically done in conjuntion with Fct 1.06
	0..No upper limit	Enter the desired level in units selected above. This entry is read only unless you are performing a calculated level calibration
Fct 1.06 **Low Calibration Capacitance** **(LOW CAP)**	pF (DEFAULT)	Read the capacitance in pF for the low calibration level associated with Fct 1.05 and 1.03. Edit to change to a known or calculated value for the 'low calibration level' in Fct 1.05. Contact Drexelbrook Service department for values if required.
	"0..45,000 (on Pro models) 0..7,000 (on Lite models)"	Capacitance value in pF. This entry is read only unless you are performing a calculated level calibration
Fct 1.07 **High Calibration Level** **(UPR LVL)**	100 feet (DEFAULT)	Display actual value from Fct 1.04 or edit to change the current stored value. The level in the vessel does not have to change if you are entering a calculated value. This step is typically done in conjuntion with Fct 1.08
	0..No upper limit	Enter the desired level in units selected above. This entry is read only unless you are performing a calculated level calibration

3.10 Calibration & Configuration via Display/Keypad (Continued)

Menu Function (display abbreviation)	Valid values	Description
Fct 1.08 High Calibration Capacitance (UPR CAP)	450pF (DEFAULT)	Read the capacitance in pF for the high calibration level associated with Fct 1.07 and 1.04. Edit to change to a known or calculated value for the 'high calibration level' entered in Fct 1.07. Contact Drexelbrook Service department for values if required.
	"1..45,000 (on Pro models) 20..7,000 (on Lite models)"	Capacitance value in pF. This entry is read only unless you are performing a calculated level calibration
Fct 2.00 Volume (VOLUME)		This menu is only required to output or display volume. 'Volume' is defined as the volume of the material in the vessel.
Fct 2.01 Volume Units (V UNITS)		
	Gallons (GALLONS) - default	Setup volume units in gallons
	Cubic Meters (M3)	Setup volume units in cubic meters
	Liters (LITERS)	Setup volume units in liters
	Barrels (BBL)	Setup volume units in barrels
	Imperial Gallons (IMPGAL)	Setup volume units in imperial gallons
Fct 2.02 Maximum Capacity (MAX CAP)	1000.0 Gallons (DEFAULT)	Enter maximum capacity in the volume units selected above. For tank height selected in Fct. 1.02
	0..No upper limit	For example '1000' can be entered for 1000 gallons if 'GALLONS' was selected as volume unit above
Fct 2.03 Vessel Type (VES TYP)	Vertical cylinder (DEFAULT)	Enter the shape of your tank
	Vertical cylinder (VERT)	
	Horizontal cylinder flat ends (HC_F)	
	Horizontal cylinder dished ends (HC_D)	
	Horizontal cylinder hemisphere ends (HC_H)	
	Sphere (SPHERE)	
	Custom (CUSTOM)	Refer to the strapping table menu for custom vessel shapes
3.00 Strapping table (STRAP)	21 points, 5% increments linear (DEFAULT)	Use this strapping table menu only for volume measurement on custom shape vessels. Or you can modify the standard shape vessel selected above in which case the shape becomes 'custom'.
Fct 3.01 Maximum points (MAX PNT)		Enter the total number of points in the strapping table
	2..21	
Fct 3.02 Point number index (INDEX)	1 (DEFAULT)	Enter the point number index
	1..MAX PNT	

3.10 Calibration & Configuration via Display/Keypad (Continued)

Menu Function (display abbreviation)	Valid values	Description
Fct 3.03 **Input value** **(INPT #)**		Read/Enter the level value associated with the point number above. '#' is the index value above
	0..Tank height	The tank height unit is selected in the level menu above
Fct 3.04 **Output value** **(OUT #)**		Read/Enter volume unit associated with the level value and point number. '#' is the index value above
	0..Maximum volume	Repeat step 3.02 to 3.04 until all points are entered
4.00 **Output** **(OUTPUT)**		Configure the output from the Universal IV device including LRV, URV, damping and fixed output.
Fct 4.01 **Variable** **(VRBLE)**	Level (DEFAULT)	
	Level (LEVEL) - default	Select level as the output variable. Level is configured in the 'Level' menu above
	Volume (VOLUME)	Select volume as the output variable. Volume is configured in the 'Volume' menu above
Fct 4.02 **LRV** **(LRV)**	0 (DEFAULT)	Enter the lower range value equivalent to 0% or 4mA output. LRV allows the user to set the 4mA (0%) output at a desired point in the tank.
	0..No upper limit	Use level or volume units selected above. This value should be lower than the value entered in Fct 4.03
Fct 4.03 **URV** **(URV)**	100 feet (DEFAULT)	Enter the upper range value equivalent to 100% or 20mA output. URV allows the user to set the 20mA (100%) output at a desired point in the tank.
	0..No upper limit	Use level or volume units selected above. This value should be higher than the value entered in Fct 4.02
Fct 4.04 **Damping** **(DAMPING)**	0.0 seconds (DEFAULT)	Enter damping in seconds to delay and filter (software RC filter) the output signal in case of rapid level variations or waves in the vessel
	0..90	Seconds. Use 0 for faster response time
Fct 4.05 **4mA trim** **(TRIM 4)**		Use this menu to calibrate the 4mA output which is not common practice. Requires calibrated meter to measure actual current.
	3.5..4.5 mA	Enter the value in mA to match the current meter. Current remains locked for approximately 2 seconds after which it turns back to measure current.
Fct 4.06 **20mA trim** **(TRIM 20)**		Use this menu to calibrate the 20mA output which is not common practice. Requires calibrated meter to measure actual current.
	19..21 mA	Enter the value in mA to match the current meter. Current remains locked for approximately 2 seconds after which it turns back to measure current.
Fct 4.07 **Fixed output** **(LOCK mA)**		Use this menu to fix the output to a certain mA value regardless of the measurement
	3.7..22 mA	Enter the value in mA. The output will stay at this value until exiting this menu item or if display times out in approx 30 seconds.

3.10 Calibration & Configuration via Display/Keypad (Continued)

Menu Function (display abbreviation)	Valid values	Description
Fct 4.08 Device ID (POLL)	0 (DEFAULT)	Enter the device ID to be used on the HART loop. Each device on the loop must have a unique device ID. Only change for multi-drop
	0..15 (default 0)	
5.0 Display (DISPLAY)		Setup the parameter(s) to be displayed on the unit during operation
Fct 5.01 Toggle? (TOGGLE?)		Toggle between enabled parameters of level, volume, capacitance, percent and/or calculated current
	No (default)	
	Yes	
Fct 5.02 Level (LEVEL)		As defined in the level menu
	Enable (default)	Select the level value configured in the level menu above
	Disable	
Fct 5.03 Volume (VOLUME)		As defined in the volume menu
	Enable	Select the volume value configured in the volume menu above
	Disable (default)	
Fct 5.04 Capacitance (CAP)		Display measure capacitance in pF
	Enable (DEFAULT)	
	Disable	
Fct 5.05 Percentage % (PERCENT)		Display the % as defined in LRV (0%) and URV (100%)
	Enable	
	Disable (DEFAULT)	
Fct 5.06 Calculated current (4--20)		Display the calculated current output from the Universal IV device
	Enable	
	Disable (DEFAULT)	
6.0 Service (SERVICE)		Use this menu for troubleshooting and service
Fct 6.01 Restore Factory Defaults (RST FAC)		Enter this menu to restore factory default
	No (DEFAULT)	
	Yes	Restoring the factory defaults will innitiate a message on the display of "DEFAULT PARAMS SET". This message will continue until power is cycled.

3.10 Calibration & Configuration via Display/Keypad (Continued)

Menu Function (display abbreviation)	Valid values	Description
Fct 6.02 **Phasing** **(PHASE)**		This menu is related to Cote-Shield and is available only on Pro models. 0 is typically used for electrically insulating liquids and interface measurements. 45 is typically used for solids and electrically conductive liquids
	0	0 default
	45	
Fct 6.03 **Pad capacitor** **(PAD CAP)**	0pF (DEFAULT)	Enter the value of an external capacitor that must be connected to the unit. Padding capacitors are typically used to reduce the sensing element standing capacitance in order to improve measurement resolution.
	0..No upper limit	Enter the actual value in pF of the capacitor connected to the unit.
Fct 6.04 **Contrast** **(CONTRAST)**	0..20 (0 DEFAULT)	0 is highest contrast and 20 is lowest contrast
Fct 6.05 **Parameter number** **(PAR NUM)**	0..65535	Factory use only
Fct 6.06 **Parameter offset** **(OFS)**	0	Factory use only
Fct 6.07 **Parameter value** **(PAR VAL)**	Integer greater than 0	Factory use only

3.11 Status Messages

There are two kinds of error conditions in the U-IV, critical and non-critical. Critical error conditions cause the U-IV to go to a fault state loop current and scroll a message across the display. Non-critical error conditions allow the unit to continue normal operations, but scroll a message across the display to indicate to the user the nature of the non-critical faults. Most non-critical errors are the result of a transient condition affecting a very small number of readings and are not indicative of a failure but informational only.

Critical Errors

Below is a list of all the critical errors that can occur in the U-IV:

Error Message:	**SENSOR CRITICAL SHIELD ERROR**
Cause:	The preamp has failed to take a shield reading for 10 consecutive attempts.
Action:	Contact factory
Error Message:	**SENSOR CRITICAL PROBE ERROR**
Cause:	The preamp has failed to take a probe reading for 10 consecutive attempts. Most likely cause is a capacitance reading above the calibrated range
Action:	Perform sensing element and cable tests in troubleshooting section. Verify calibration and configuration parameters are set correctly. Contact factory
Error Message:	**SENSOR CRITICAL REF CAP ERROR**
Cause:	The preamp has failed to take a reference cap reading for 10 consecutive attempts.
Action:	Contact factory
Error Message:	**SENSOR CRITICAL COMM ERROR**
Cause:	The output module has failed to communicate with the preamp for 20 consecutive readings.
Action:	Contact factory.
Error Message:	**SENSOR STACK OVERFLOW**
Cause:	An error has occurred during operation that corrupted the SRAM.
Action:	Contact factory.
Error Message:	**SENSOR FLASH CKSM ERROR**
Cause:	The preamp failed the checksum test on power-up.
Action:	The unit needs to be replaced. Contact factory.
Error Message:	**SENSOR SPI ERROR**
Cause:	Preamp could not communicate with A2D through SPI bus.
Action:	Contact factory.
Error Message:	**SENSOR INVALID PROFILE**
Cause:	An invalid profile has been downloaded to the preamp.
Action:	Contact factory.
Error Message:	**POWER UP FAILURE**

3.11 Status Messages (Continued)

Cause:	The output module failed to download all startup parameters to the preamp.
Action:	Cycle power to the system to attempt power-up procedure again. Contact factory
Error Message:	**FLASH CKSM ERROR**
Cause:	The output module failed the checksum test on power-up.
Action:	The unit needs to be replaced. Contact factory.
Error Message:	**STACK OVERFLOW**
Cause:	An error occurred during operation that corrupted the SRAM.
Action:	Contact factory.
Error Message:	**FORCED RANGE MODE**
Cause:	The output module is in forced range mode because of HART command 215.
Action:	Contact factory.

Noncritical Errors

The following is a list of all the non critical error messages that could be displayed on the U-IV:

Error Message:	**SENSOR NONCRITICAL SHIELD ERROR**
Cause:	The preamp encountered an error when attempting to take a shield reading.
Action:	If error persists, contact factory.
Error Message:	**SENSOR NONCRITICAL PROBE ERROR**
Cause:	The preamp encountered an error when attempting to take a probe reading.
Action:	If error persists see actions for SENSOR CRITICAL PROBE ERROR.
Error Message:	**SENSOR NONCRITICAL REF CAP ERROR**
Cause:	The preamp encountered an error when attempting to take a ref cap reading.
Action:	If error persists, contact factory.
Error Message:	**SENSOR NONCRITICAL LEVEL VALID ERROR**
Cause:	The preamp encountered an error when attempting to take a test cap reading.
Action:	If error persists, contact factory.
Error Message:	**SENSOR NONCRITICAL COMM ERROR**
Cause:	Communication between the output module and the preamp are intermittently timing out.
Action:	If error persists, contact factory.
Error Message:	**FIXED CURRENT MODE SET**
Cause:	The output module is in fixed current mode because of HART command 40.
Action:	Consult factory.

Section 4

Section 4: Configuration and Calibration with HART® Calibrator

4.1 Start-up

After the Universal IV transmitter is installed and loop power is applied, per Section 2, do the following:

1. Connect the handheld calibrator as shown in ***Figure 4-1***.

2. Turn on the Calibrator and look for the ONLINE screen to appear. ONLINE means that the handheld HART® Calibrator has recognized the Universal IV and is ready for Configuration and Calibration.

3. You must start the process by doing the Configuration first-- followed by Calibration. There are also instructions for configuring the Strapping Tables and for doing a D/A Trim to make the loop output agree with a calibration standard for loop current.

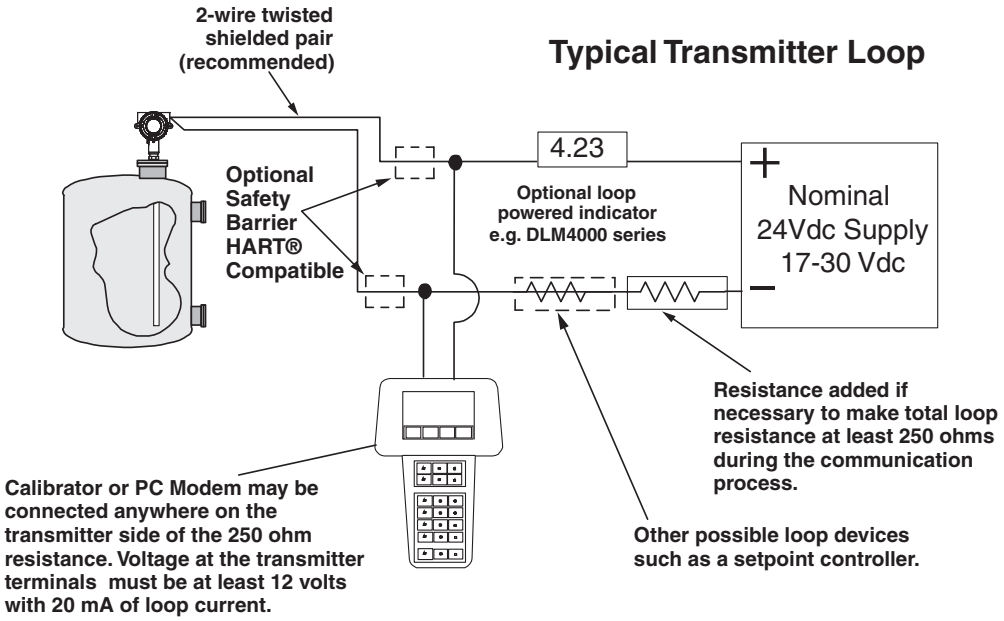

Figure 4-1
Typical Transmitter Loop

4.2 Configuration

Following is the sequence for Configuration using the HART® handheld device.

Select **Device Setup.**

Select **Configuration Menu.**

Select **Level Config.**

Select **Level Type** - edit Level Type - return to Level Config screen.

Select **Level Units** - edit Level Units - return to Level Config screen.

Select **Max Level** - edit Max Level - return to Level Config screen.

Select **LRV** - edit LRV - return to Level Config screen.

Select **URV** - edit URV - return to Level Config screen.

Select **Damp Time** - edit Damp Time - return to Level Config screen.

Select **Chg Anlg Loop Assign** - edit Current Loop Assign. If current loop assign is Level and is correct, go to next screen and select Exit. Proceed to 4.3 Calibration.

If Vessel configuration is to be selected, choose Vessel, go back to Config screen and select Vessel Config. Edit all values as done for Level Config. Select Exit and proceed to 4.4 Calibration.

Note: Changing Units or Analog Loop Assignment during configuration will initiate an automatic conversion of the values for LRV, URV,Lower Level and / or Upper Level. It is necessary to read the transmitter to view the changes

Configuration Chart

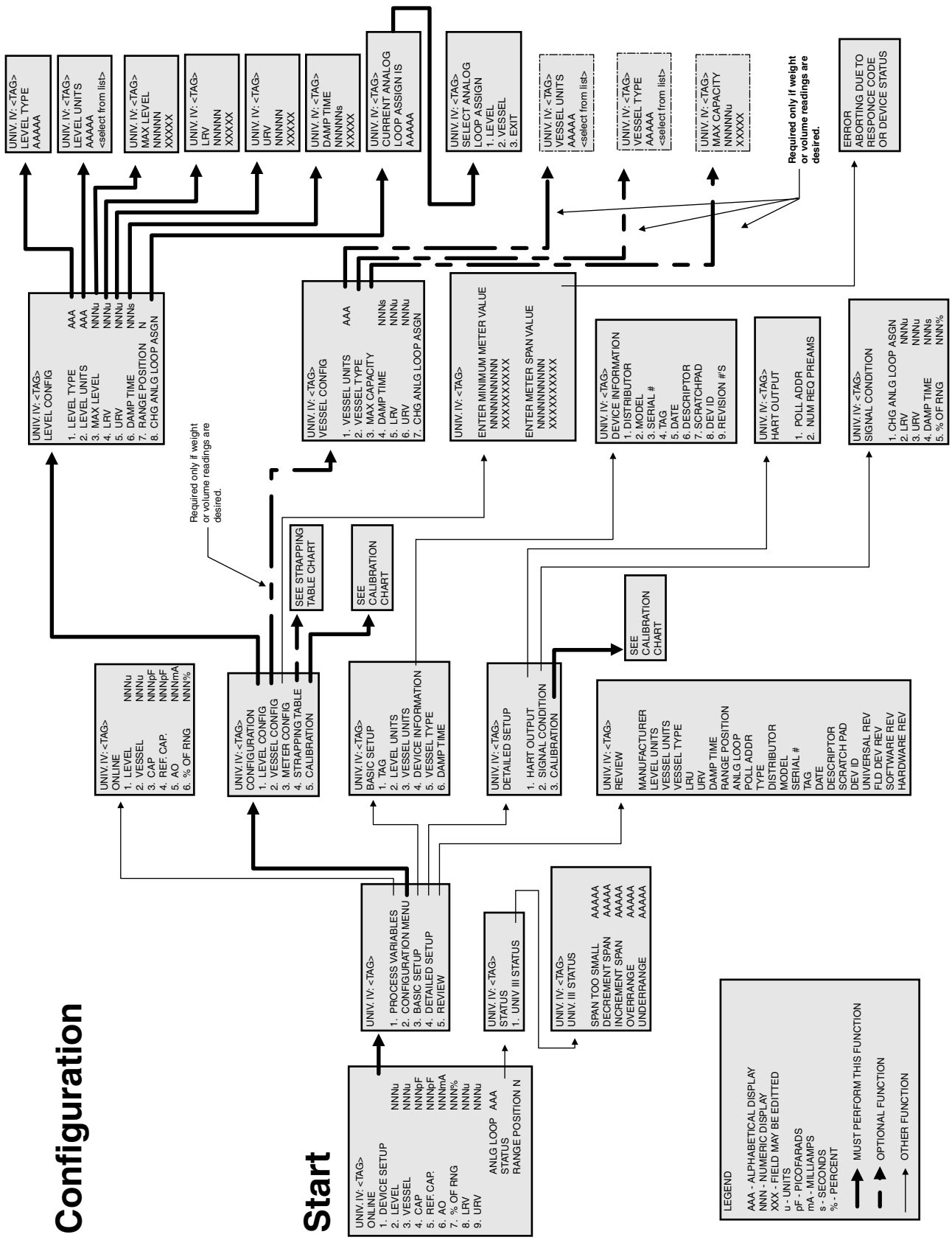

4.3 Calibration

There are two methods of calibrating the Universal IV transmitter: **Point Calibration or Capacitance Calibration**.

Point calibration uses the actual level in your vessel for calibration. The further apart the two points are for the calibration, then the better the accuracy of the overall measurement.

Capacitance calibration uses values obtained from the Drexelbrook Service department (or a previous calibration or identical application) for the zero and span calibration data. Call 1-800-527-6297 for assistance. Please complete the Bench Calibration Information Sheet on **Page 50** and Fax to 215-443-5117.

It is permissible or sometimes even recommended that both methods be used in order to establish a calibration standard. For example, if the vessel was already filled before the calibration was attempted and it is difficult or impossible to lower the level to establish the second point, it would be best to use a calculated zero capacitance for the low point and actual level for the high point. While this wouldn't be as accurate as two known level points, it will be reasonably accurate until an actual low point can be established. The Service department will help in calculating high or low capacitance values.

4.3.1 Point Calibration

Following is the sequence for Point Calibration using a handheld Calibrator.

Equipment Required:

- Universal IV HART® Smart Transmitter
- HART® Communicator
- 24V Power source
- 250 ohm minimum loop resistance
- Two known process levels applied to the sensing element

This procedure uses an example of a point calibration for full-scale (20mA) = 35 ft. and zero (4mA) = 1.5 ft.

4.3.1 Point Calibration (Continued)

Select **Device Setup**.
Select **Configuration Menu**.
Select **Calibration**.

Select **Point Cal** - select either **Low Point Cal** or **High Point Cal** depending on whether you plan to raise or lower the level for your second point—edit value to agree with the present actual level and return to Point Cal screen. Repeat for second point or proceed to Capacitance Calibration.

Exit - Calibration is complete.

Calibration Chart

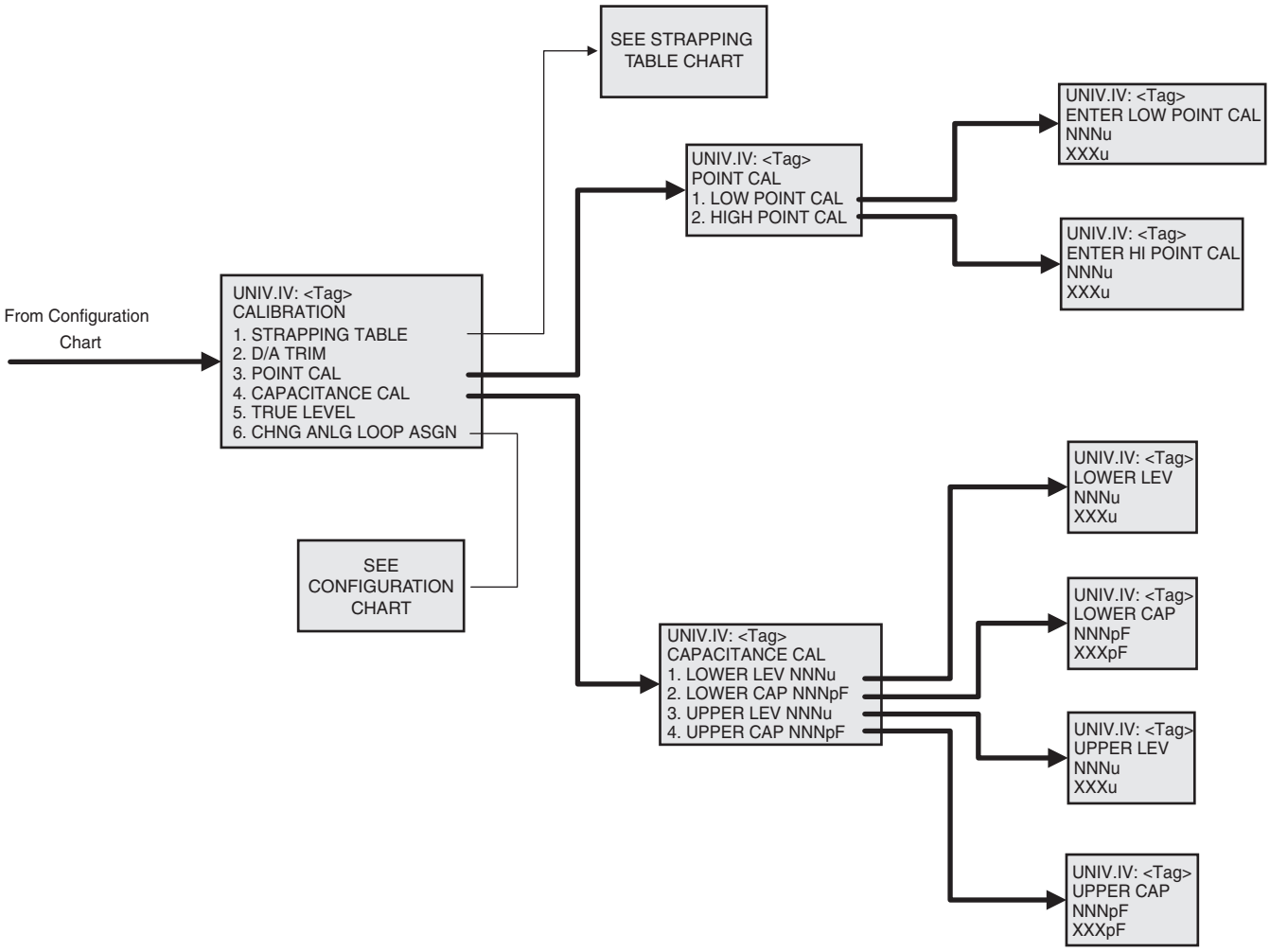

4.3.2 Fine Tuning Calibration

When a known level is available that is closer to the LRV or URV than a previous calibration point, it may be used as a new calibration point to increase accuracy. This is done in the following steps:

Enter the upper calibration point and/ or
Enter the lower calibration point with the new known level applied.

The order of execution between the upper and lower calibration procedures does not matter. They can be done at different times.

4.3.3 Capacitance Calibration

Following is the sequence for Capacitance Calibration using the handheld HART® Calibrator.

Select Device Setup.
Select Configuration Menu.
Select Calibration.

Select Capacitance Cal—select either Lower Level or Upper Level depending on whether the next value will be higher or lower for the second point—edit capacitance value and level as a pair—return to Capacitance Cal screen.

Exit - Calibration is complete.

4.3.4 Strapping Table

The strapping table is a 2-point to 21-point table used by the Universal IV to define the relationship between level and output current. There are five strapping tables built into the transmitter software. These are: Linear (vertical tank); Horizontal Tank with flat ends; Horizontal Tank with dished ends; Horizontal Tank with hemispherical ends; and Spherical Tank. These predefined tables are automatically created by selections made with Vessel Config assignment during Configuration procedure in Section 4.3.

If output-to-level relationship is not defined by one of these tables, you may create a table in Strapping Table program. To create a non-linear relationship, you will need at least 3 points and may use as many as 21 points. A 21-point table will define relationship to approximately a 0.1% accuracy. Common example for a simple table would be Cone Bottom Vertical tank which would require 3 points—bottom, straight-side target point, and top. However, a more complex geometry could benefit from using all 21 available points.

- Plan your table by filling out the form below. You may use first column which lists every 5% between 0 and 100%, or you may fill in your own values in column 2.

- Fill out column 3 with output values corresponding to those listed in column 1 or 2.

4.3.4 Strapping Table (Continued)

Point Number	Level Standard Preset Values % Level	Level Optional Values % Level	Output Value In Selected Units
1.	0		
2.	5		
3.	10		
4.	15		
5.	20		
6.	25		
7.	30		
8.	35		
9.	40		
10.	45		
11.	50		
12.	55		
13.	60		
14.	65		
15.	70		
16.	75		
17.	80		
18.	85		
19.	90		
20.	95		
21.	100		

4.4 D/A Trim

Refer to the D/A Trim diagram for the D/A Trim sequence and Strapping Table configuration.

Strapping Table Chart

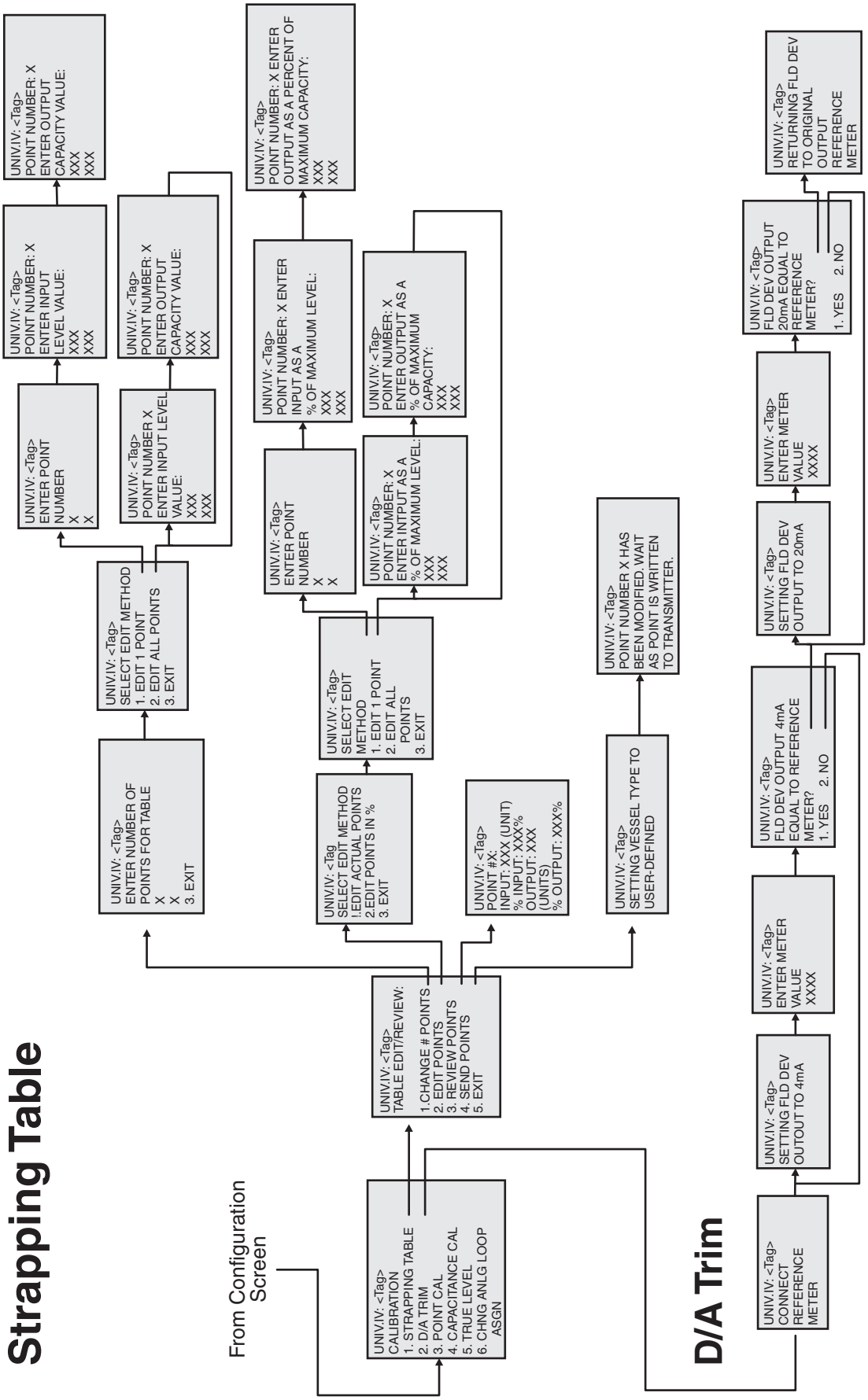

4.5 Bench Calibration Information Sheet

Company _____

City _____ State _____

Transmitter S/N _____ Probe S/N _____ Tag No. _____

Filled out by: _____ Date _____ Phone _____ Fax _____

Material being Measured - Fill out any known information

Name of Material: _____ ☐ Level Measurement ☐ Interface Measurement

Dielectric Constant: (K) _____

Conductivity: (g) _____

Other: _____

Vessel Shape
- ☐ Vertical Cylinder
- ☐ Horizontal Cylinder
- ☐ Other _____

Installation Details

☐ NPT Thread Mount

☐ Flange Mount- if flange mount

B = _____ inches

E = _____

A = _____ inches

H = _____ inches

D = _____ inches

IL = _____ inches

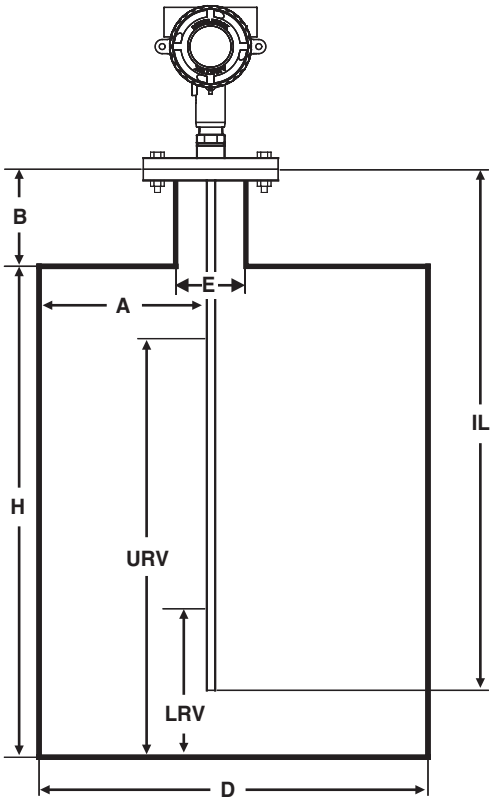

Unless specified otherwise, calibration values of zero and span capacitances will be based on 4-20 mA being over the entire range of 'H'. If other values are desired specify LRV and URV in inches.

LRV = _____ inches

URV = _____ inches

Calculations by Drexelbrook

LRV _____ Calculated Zero Capacitance _____ pF

URV _____ Calculated Span Capacitance _____ pF

Calculated by: _____ Date _____

Phone 800-527-6297

Fax 215-443-5117

Appx-A-smh.pmd
Page 0 of 1 Created 07/31/1997 by ELS
Revised 08/07/2002 12:21 PM

Section 5: Troubleshooting

Problem/Symptom	Tests in order of probability	Reference Section(s)	Comments
HART® Calibrator gives error message that no device was found	Check modem connections Check for 250Ω resistance (min.) Check voltage at transmitter	5.2 and 5.3	Often a result of loop connection problems or output current > 20 mA
HART® Calibrator gives error message that device could not be identified	Check modem connections Check for 250Ω resistance (min.) Check voltage at transmitter	5.2 and 5.3	Often a result of loop connection problems or output current > 20 mA
Can't communicate with transmitter using Drexelbrook PC Software	Check modem connections Check for 250Ω resistance (min.) Check voltage at transmitter Try another modem	5.2 and 5.5	Often a result of loop connection problems or output current > 20 mA
0 mA output all the time (no measurable output current at any time)	Check voltage at transmitter Check polarity of loop	5.2 (5.3, 5.4, or 5.5)	Probable loop problem. Faulty connection in loop
More than 20 mA output all the time (output current always exceeds 20 mA)	Check for moisture in head of sensor Verify sensing element wiring is correct Test Sensing Element Check Calibration	2.5 5.5 Section(s) 3, 4	
Output drifts (output accuracy varies slowly over time…e.g. hours or days)	Test transmitter without sensing element (drift test) Verify proper sensing element ground reference	5.4 Fig. 2-6	
Output erratic - (output jumps around noticeably in terms of seconds or minutes)	Check process level Check for Static Discharge Check for radio interference	5.7 5.8	Erratic readings often show actual process conditions. Look for bubbles or stratification, etc.
Output intermittent (output jumps quickly usually between >0mA and some "on scale" value	Check Signal Loop Connections	5.7 5.8	Intermittent Loop Connection
Inaccurate readings (Level readings are incorrect compared to actual known level)	Check calibration Check method of comparison	Section(s) 3, 4	Have you verified actual level? (At times even sight gauges can be misleading.)
Reading does not change with level	Check cables Check sensing element	5.6 5.5	Be sure that level is really changing. Possible plugged or unvented stilling well.
Output goes in opposite direction from level change	Check calibration	Section(s) 3, 4	Probable high point cal/low point cal reversal or inverted interface application.
Application-related Problems	**Comments**		
Product Bridging	When process material fills what was originally airspace between the sensor and a nozzle or the vessel, it no longer behaves like a coating. It measures like actual level. Contact Drexelbrook.		

Table 5-1 Problem / Symptom Chart

5.1 Identifying a Problem/Symptom

Use Table 6-1 as a guide to find and correct a problem when it occurs. Most problems are not related to transmitter failure. It is important to be methodical when tracking down a problem. If you experience a problem that you cannot solve using this guide, call the Drexelbrook 24-hour Service Hot line at 1-800-527-6297 or 215-674-1234. You may also E-mail us at the Internet address: drexelbrook.service@ametek.com. Further service information may be found at our World Wide Web address www.drexelbrook.com.

When you contact us, be prepared to give the service person as much information as you can about the model numbers, serial numbers, application requirements, and the materials being measured. At the end of this section, a form is available to organize the information that will help us resolve the problem. Prior to your call, a copy of the completed form can be faxed directly to the Service department at (215) 443-5117.

5.2 Troubleshooting Loop Connection

Specific transmitter loop connections will vary from installation to installation but in general will be connected in a similar manner to typical transmitter loop in ***Figure 4-1***. When troubleshooting the loop connection, verify the following items.

- Loop devices are wired in series.
- There is at least 250 ohms total loop resistance.
- There is at least 13 Vdc available for the transmitter when a loop current of 20 mA is flowing.
- The open circuit voltage does not exceed 30 VDC

5.3 Universal IV transmitter does not communicate with Drexelbrook HRTWin Software

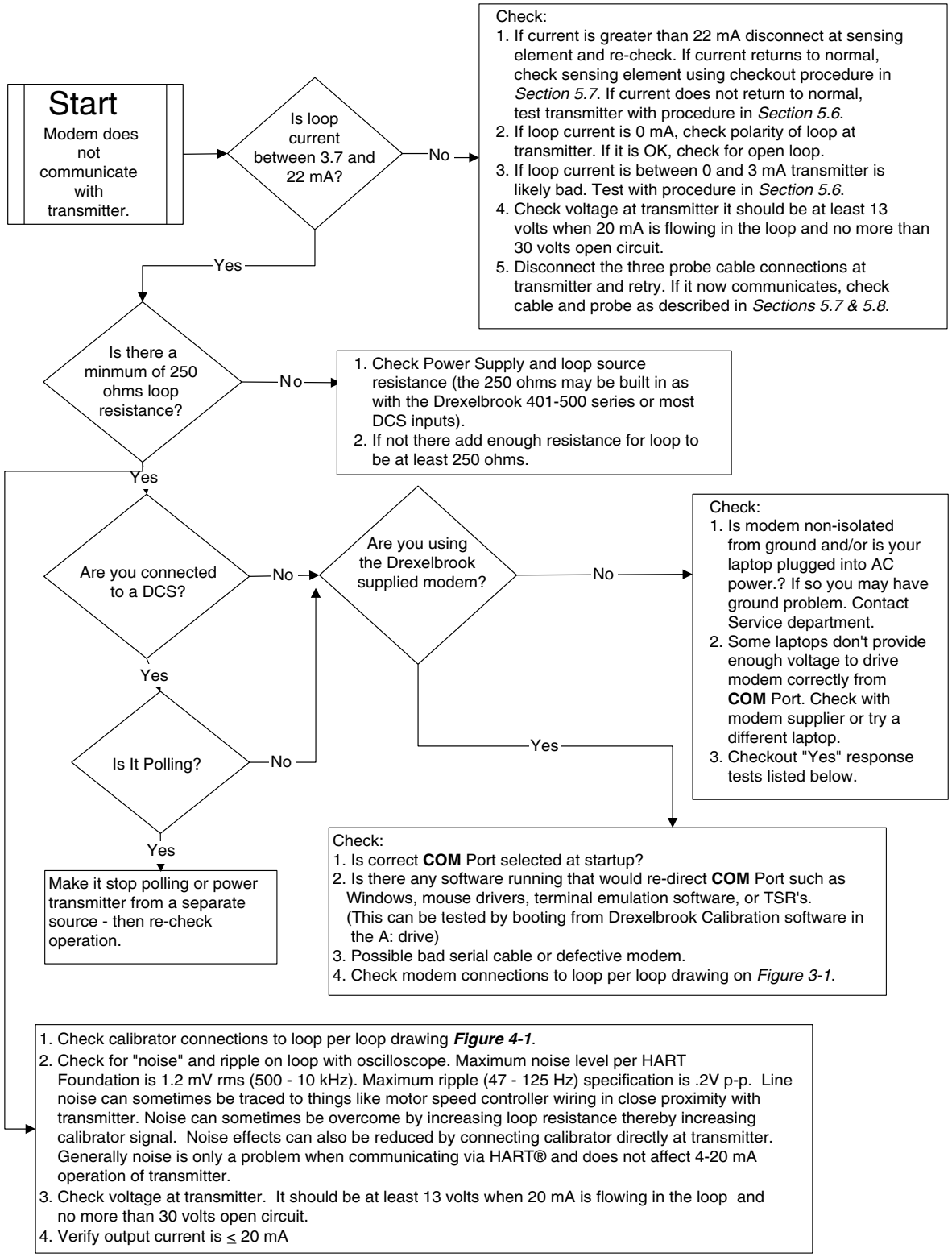

5.4 Transmitter Drift Test

If symptoms point toward calibration drift, it is important to determine if the apparent drift is coming from the transmitter, the sensing element, or the application of the equipment. The following test determines if the transmitter is stable. In most cases, no drift will be found in the transmitter.

1. Remove coaxial cable from the transmitter terminals.
2. Without changing any data stored in the transmitter, connect a Drexelbrook capacitance substitution box (401-0006-008) or an NPO test capacitor from the sensing element terminal to the GND terminal on the transmitter ***(See Figure 5-1)***. (Select a capacitance value that produces between 4 and 20 mA of loop current.)
3. Observe the loop current (***See Fig 5-2)*** over a 12-hour period to confirm the stability of the unit. If the readings remain stable for this period, then the problem is not in the transmitter. If the loop current has changed more than 1% during the test period, then the unit is defective. Please contact the Service department for further instructions regarding repair or replacement.

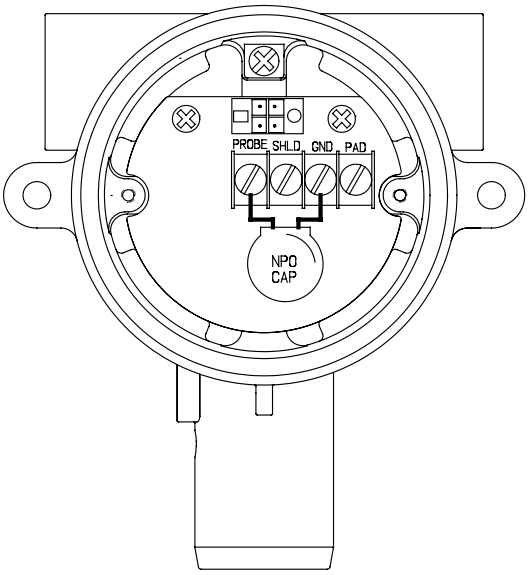

Electronic unit removed to access sensing element board terminal block

Figure 5-1

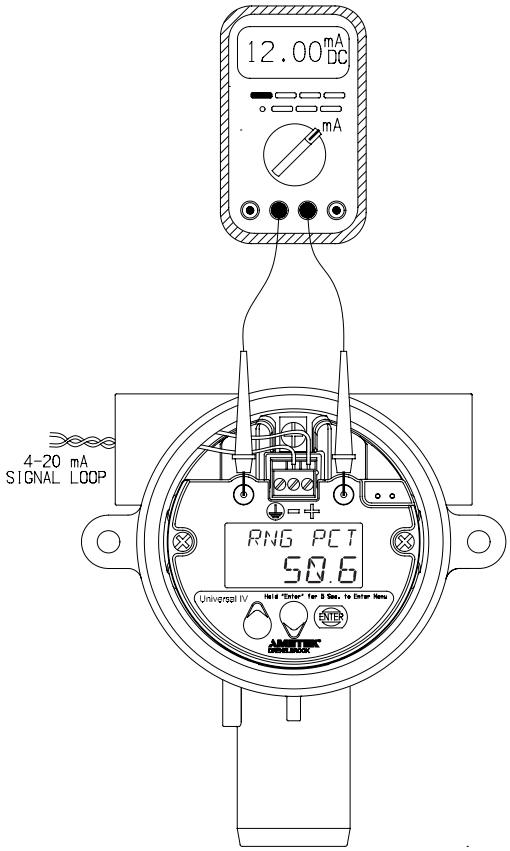

Figure 5-2

5.5 Troubleshooting Sensing Element

Troubleshooting sensing element requires use of an analog ohmmeter. Digital meters do not properly measure resistance for the purpose of this test. An analog ohmmeter provides more current when measuring resistance, which is required to detect a pinhole or crack in the sensing element insulation. In addition, digital meters frequently give erroneous results due to a battery-like effect when dissimilar metals contact conductive liquids.

CAUTION: Sensing element is intrinsically safe. Therefore, when using this product, it is recommended that all service activity comply with appropriate guidelines.

Remove sensing element from vessel to a safe area. Test outlined in steps 1 and 2 can be performed in a metal test vessel, grounded to the sensor, and filled with high conductivity water. Depending on locality, tap water may not be suitable. If low conductivity water is used, a spoonful of table salt can be added which will increase the conductivity.

In the following tests, if it is not possible to raise or lower the level in vessel, the sensing element may be suspended in a metal pipe or other container that is filled with conductive water (see above note) and connected to grounded sensing element condulet. If container is not metallic, then a ground wire or rod is needed to be placed into the water and referenced to sensing element condulet or mounting devices.

Testing the Sensing Element - Step 1 (*Figure 5-3*)
With the material below the sensor, and the coaxial cable disconnected at the sensing element, measure the resistance from the sensing element center connector to ground connector (or condulet). The ohmmeter should be set to R x 10000 scale. The reading should be infinite (open circuit). Readings of less than one meg-ohm indicate excessive electrical leakage, probably due to product leakage or condensation in the packing seal or condulet. Record the resistance value measured. Contact the Service department for recommended repairs.

Testing the Sensing Element - Step 2
(*Figure 5-4 fully insulated sensing elements only*)
Raise the level in the vessel to cover as much of the sensor as possible. Repeat the measurement made in step 1. Readings of 1 meg-ohm or less indicate a pinhole or crack in the sensing element insulation. Failed insulation is not field repairable. Consult the Service department for further assistance.

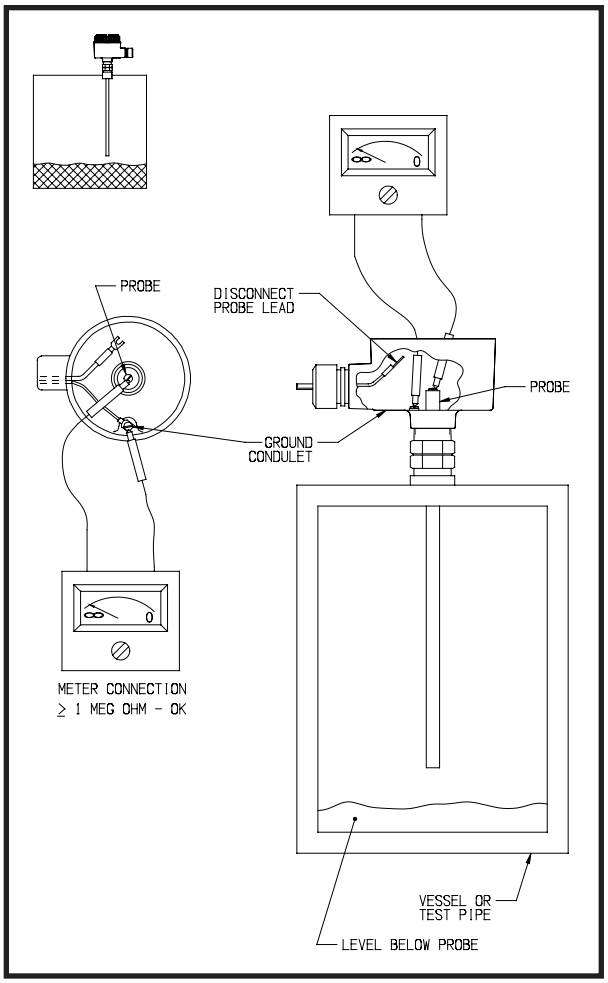

Figure 5-3
Sensing Element Testing, Material Below the Sensing Element

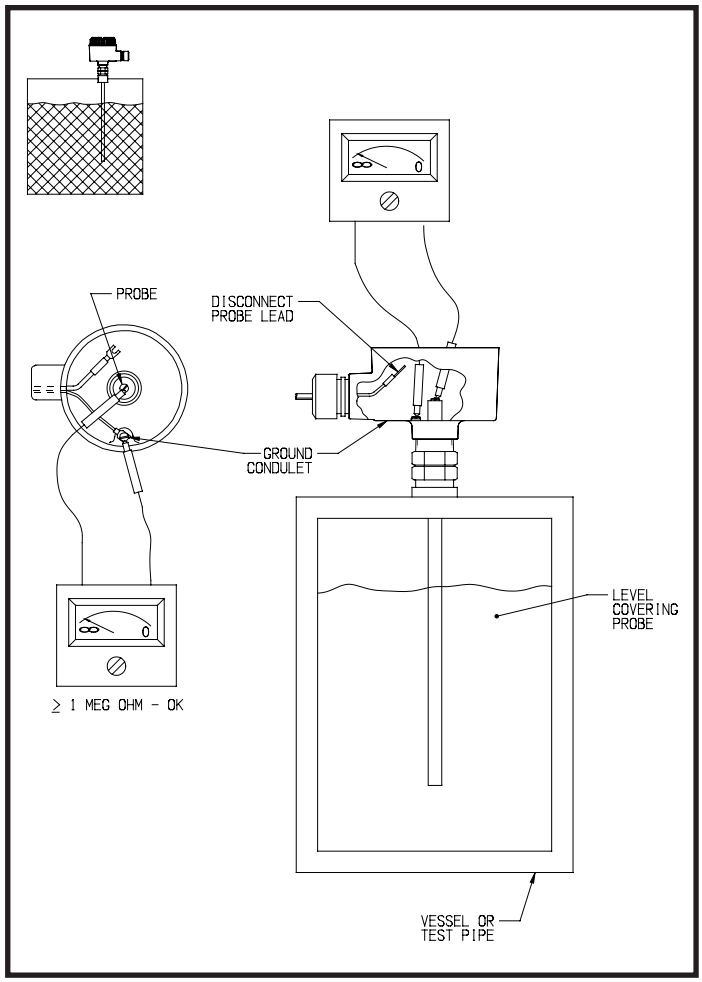

Figure 5-4
Sensing Element Testing, Material Covering the Sensing Element

5.6 Troubleshooting Coaxial Cable

NOTICE

If there is water or other conductive material in the conduit (ie.: Excessive wire lube) it can change the electrical properties of the coax cable and cause the system to perform poorly. Moisture in the conduit may not be detected by the following test. The only sure way is to inspect the coax and associated conduit for trapped water.

1. Disconnect all three wires of the coaxial cable at the electronic unit.
2. Disconnect all wires at the sensing element end of the coax.
3. Using an ohmmeter, measure between two of the coaxial cable conductors. Note any reading. Repeat for all three conductors. All readings should show an open circuit, (infinite resistance).

CHECK FOR SHORT CIRCUIT

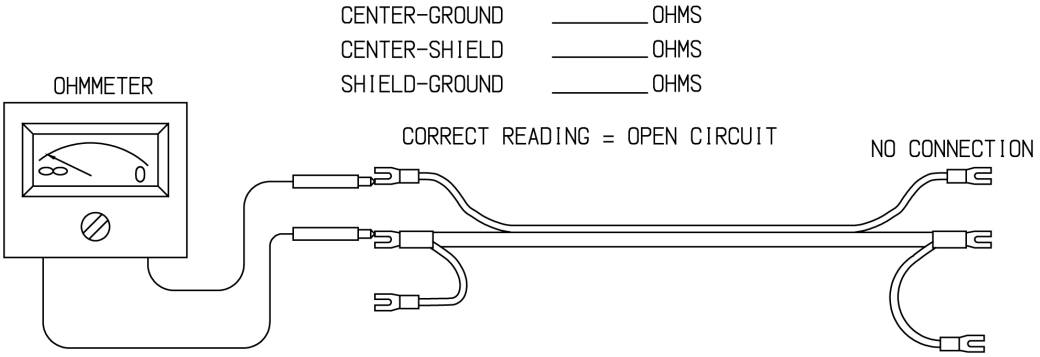

4. Check for continuity of each conductor. Short out two of the coaxial cable conductors and measure these two conductors at the other end. A reading < 10ohms indicates a good cable. Move the short to the third conductor and repeat.

CHECK FOR CONTINUITY

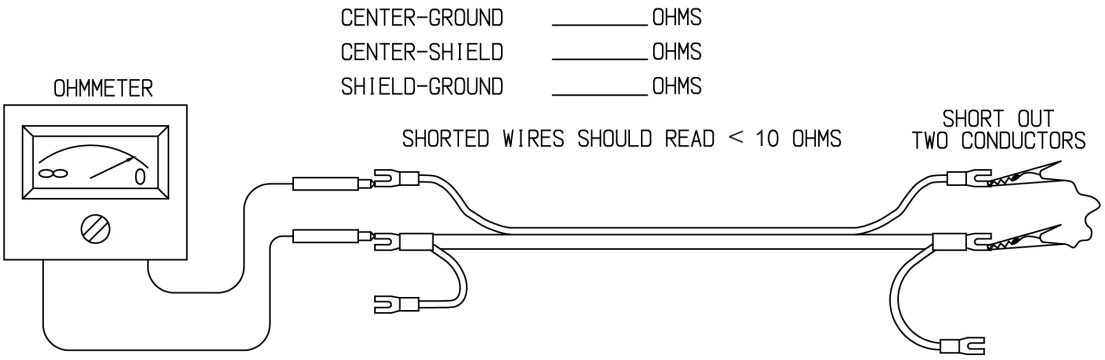

5.7 Static Electricity

Static electricity can cause the 4-20 mA output to appear to jump around in an erratic fashion with a time period of a few seconds. Applications that are prone to static electricity include insulating liquids that may be agitated or pumped and granulars that may be air-conveyed at high rates of speed. Conductive liquids and conductive granulars tend not to generate static electricity. In addition to causing erratic readings, static electricity can cause instrument failure. If you ever get a static discharge from the product to the sensing element, you need spark protection. (***See section 2.6***)

5.8 Radio Frequency Interference

All Drexelbrook transmitters have a significant amount of RFI protection built in. There are situations, however, where the standard protection is inadequate. RFI filters are available to provide additional protection for both the sensor and the 4-20 mA loop from unusually difficult sources of interference. Proper grounding and careful attention to installation practices can usually make them unnecessary. Some recommended installation practices are referenced in ***Section 2.8***.

If RFI continues to be a problem, contact the Drexelbrook service department for the proper filters and assistance.

5.9 Factory Assistance

AMETEK Drexelbrook can answer any questions about your level measurement system.

For Technical Support: 1-800-527-6297

All other inquiries: Call Customer Service at 1-800-553-9092 (US and Canada) , or + 215-674-1234 (International).

If you require assistance and attempts to locate the problem have failed:

- For Technical Assistance call toll-free:
  1-800-527-6297 (US and Canada)
  or + 215-674-1234 (International),
- FAX: + 215-443-5117,
- E-mail: drexelbrook.service@ametek.com

Please provide the following information:

- Instrument Model and Serial Numbers
- Sensing Element Model Number and Length
- Material being measured
  - Temperature
  - Pressure
  - Agitation
- Brief description of the problem
- Checkout procedures performed and results

5.10 Field Service

Trained field service engineers are available on a time-plus-expense basis to assist in start-ups, diagnosing difficult application problems, or in-plant training of personnel. Contact the service department for further details.

5.11 Customer Training

Periodically, AMETEK Drexelbrook instrument training seminars for customers are held at the factory. These sessions are guided by Drexelbrook engineers and specialists, and provide detailed information on all aspects of level measurement, including theory and practice of instrument operation. For more information about these valuable workshops, write to AMETEK Drexelbrook, attention: Communications/ Training Group, or call direct + 215-674-1234.

5.12 Return Equipment

Any equipment being returned for evaluation or credit must be pre-approved by the factory.

In many applications, sensing elements are exposed to hazardous materials.

- OSHA mandates that our employees be informed and protected from hazardous chemicals.
- Material Safety Data Sheets (MSDS) listing the hazardous materials to which the sensing element has been exposed MUST accompany any repair.
- It is your responsibility to fully disclose all chemicals and decontaminate the sensing element.

To obtain a return authorization (RA#), contact the Service department at 1-800-527-6297 (US and Canada) or + 215-674-1234 (International).

Please provide the following information:

- Model Number of Return Equipment
- Serial Number
- Process Materials to which equipment has been exposed
- MSDS sheets for any hazardous materials
- Billing Address
- Shipping Address
- Purchase Order No. for Replacement / evaluation

Please include a purchase order even if the returned unit is under warranty. If repair is covered under warranty, you will not be charged.

Ship equipment freight prepaid to:
AMETEK Drexelbrook
205 Keith Valley Road
Horsham, PA 19044-1499

COD shipments will not be accepted.

5.13 Universal IV Troubleshooting Guide

AMETEK Drexelbrook
Universal IV Troubleshooting Guide
Service Department (800) 527-6297 FAX (215) 443-5117

Service Dept. Contact_____

Customer Name_____ Company_____ City/State_____

Phone #_____ Fax #_____

Electronic Unit Model #_____ Serial #_____ Span Range_____

Sensing Element Model #_____ Serial #_____ Insertion Length_____ Mounting_____

Process Material_____ Temp._____ Press._____ Other_____

Provide as much of the following information as possible. **All** of the information is available from the Drexelbrook Calibration Software, or from a Rosemount Model 275 with Drexelbrook Device Description (DD) installed. Information with an asterisk is available from a handheld calibrator in the Generic mode.

AMETEK Drexelbrook HRTWin Protocol Software Version _____

*Tag ID_____ *Serial Number_____

*Scratch Pad_____ Software Version_____

Analog Loop Assign_____ Span Range_____

*Damping Time_____ Type (00/30)_____

Level Configuration

Level Units_____

Maximum Level_____

Level Type_____

Vessel Configuration

Vessel Units_____

Maximum Capacity_____

Vessel Type_____

*LRV (4mA)_____

*URV (20mA)_____

Capacitance Calibration

Lower Level_____

Lower Capacitance_____

Upper Level_____

Upper Capacitance_____

Press F4 For Real-Time View

Level_____

Vessel_____

Capacitance_____

Reference_____

Loop Current_____

Percentage_____

Status_____

Vessel Sketch

Show principal tank dimensions, including vessel construction, mounting location, nozzle, LRV, URV, present level, etc.

Detailed description of problem:_____

_____

_____

_____

_____

_____

_____

_____

_____

Section 6

Section 6: Specifications

6.1 Transmitter Specifications

Technology
RF Admittance / Capacitance

Supply Voltage
13-30VDC, 2-wire loop powered

Ouput/Digital Protocol
4-20mA, HART

Compatible with HART®

HART device description available

Load Resistance
Maximum 550 ohms at 24 VDC

Minimum 250 ohms for HART protocol

Ambient Temperature
-40°C to 75°C (-40°F to 167°F)

Process Temperature
-106°C to 815°C (-160°F to 1500°F), probe dependent

Process Pressure
Vacuum to 1350 bar (20,000 psi), probe dependent

Process Connection
NPT, BSP, JIS, ANSI, DIN, Grayloc, Tri-Clamp, Perlick Fitting and more upon request

Main Wetted Parts
316L, PVDF, TFE, FEP, PFA, HastelloyC, Monel and more depending on applications requirements. Consult factory

Sensor Length
1" to 800 Feet (25.4mm to 244m)
Probe, Pro and Lite model dependent

Capacitance Measurement Range
Autoranging (6 ranges)

1-45,000 pF (Pro model)

20-7,000 pF (Lite model)

Cote-Shield™
Pro model: Coating rejection with 100Khz or 15Khz and 45° phasing

Lite model: 100Khz or 15Khz without phasing for insulating coating or conductive non-coating applications only

Integral or Remote Configuration
100 ft max cable length for remote configuration

Accuracy
0.25% of span (ranges 2-6)

Includes the effects of linearity, hysteresis and repeatability on electronics only

Response Time to Level Changes
350 msec nominal (no damping applied)

1-90 seconds programmable damping time

Supply Voltage Effect
0.2% of full scale max

Temperature Effect
0.5% per 100°F (37.7°C) change

Start-Up Time
< 12 seconds

Configuration and Calibration
Standard LCD display and keypad on all models

HRTWIN™ PC-based software

Or third party Model 275, 375, 475 handheld communicator

Emission and Surge Protection
Compliant with IEC6100-4.2, 3, 4, 6, 8

Compliant with CISPR11 Group I, Class B

Approvals
Intrinsically Safe (IS)
Explosion Proof (XP) without IS barrier

FM, FMc, ATEX, IECEx

CE Mark

Section 7

Section 7: Hazardous Location Approval Supplementary Installation & Operating Instructions

7.1 General safety information

This document contains installation instructions for potentially explosive atmosphere applications.

The Universal U IV is approved for use in hazardous locations when properly installed. Control drawings detailing installation guidelines are available in ***Section 8***.

Always Install to Local Codes / Requirements / Directives as Mandated by the Authority Having Jurisdiction.

The aluminum enclosure must be protected from mechanical friction and impact that could cause ignition capable sparks.

7.1.2 Warning

- Installation, Start-Up, and Service should only be performed by personnel trained in explosive atmosphere installations.
- Substitution of Components May Impair Intrinsic Safety.

7.1.3 Device Description

The Universal IV is a Continuous Level Measurement System. Measurements are displayed via remote communications or an integrated display screen.

7.1.4 Electrical connection

WARNING! Read the following information carefully.

- Live Maintenance should only be carried out by Skilled Personnel trained in explosion protection methods.
- Test Equipment used to perform “Live Maintenance” must be certified to use in the associated hazardous area.

Intrinsically Safe Installations

When the Universal IV is installed as an intrinsically safe device per the agency control drawings, the housing cover may be safely opened. For system configuration, remove the view port housing cover to access the display keypad for local system configuration.

7.1.4 Electrical Connection (Continued)

Explosionproof or Flameproof Installations

No Live maintenance is permitted.
Disconnect power to the device and check that the atmosphere is clear of hazardous substances.

7.1.5 Commissioning

Start-up checklist

Do not connect power until you have gone through the checklist below

1. Are the wetted components (gasket, flange and sensing element) resistant to the corrosive properties of the tank product?

2. Does the information given on the nameplate correspond with the application?

3. Ex d applications: Have you connected the equipotential bonding system correctly?

4. Ex i applications: Are you using an intrinsic barrier within the correct parameters?

5. Did you install cable entries of the correct internal diameter so that there is a good seal around the cable? Are the cable glands suitably certified per the application and the hazardous area parameters?

6. Do not use the earth terminal in the wiring compartment: use the equipotential bonding system.

7.2 The Compartment Cover

Viewport Cleaning: The viewport is made of Borosilicate glass and can be cleaned with any common glass cleaning product (e.g.: Windex™, Isopropyl alcohol, etc.) that is suitable for the Class and Division rating of the specific system installation.

7.2.1 Opening the cover

Procedure

1. Unscrew cover stop, if applicable
2. Unscrew terminal compartment cover

7.2.1 Closing the cover

Warning: Ex d [ia] applications
Check that the terminal compartment cover is screwed tight and the cover stop (if applicable) is fastened tightly to the cover.

7.3 Standards and Approvals

7.3.1 FM US Approvals - Install per 420-0004-412-CD

The Universal IV Level Transmitter is rated as Intrinsically Safe for Class I, II and Ill, Groups A-G and Class I, Zone 0, Group IIC, in accordance with drawing 420-0004-412-CD; Nonincendive Class I, Division 2, Groups A-D Hazardous (Classified) Locations.

Furthermore, the Integral version is rated as Explosionproof for Class I, Division 1, Groups C & D; Dust lgnitionproof for Class II & Ill, Division 1, Groups E-G and Class I, Zone 1, Group lIB Hazardous (Classified) Locations with an integral sensor that is Intrinsically Safe for Class I, II & Ill, Groups A-G and Class I, Zone 1 Hazardous (Classified) Locations. The Remote version is rated as Explosionproof Class I, Division 1, Groups C & D; Dust-lgnitionproof for Class II & Ill, Division 1, Groups E-G and Class I, Zone 1, Group lIB Hazardous (Classified) Locations with connections to a 700 Series sensor that is Intrinsically Safe for Class I, II & Ill, Groups A-G and Class I, Zone 1 Hazardous (Classified) Locations.

7.3.2 FM Canada Approvals - Install per 420-0004-412-CD

The Universal IV Level Transmitter is rated as Intrinsically Safe for Class I, II and Ill, Groups A-G and Class I, Zone 0, Group IIC, in accordance with drawing 420-0004-412-CD; Nonincendive Class I, Division 2, Groups A-D Hazardous Locations.

Furthermore, the Integral version is rated as Explosionproof for Class I, Division 1, Groups C & D; Dust lgnitionproof for Class II & Ill, Division 1, Groups E-G and Class I, Zone 1, Group lIB Hazardous Locations with an integral sensor that is Intrinsically Safe for Class I, II & Ill, Groups A-G and Class I, Zone 1 Hazardous Locations. The Remote version is rated as Explosionproof Class I, Division 1, Groups C & D; Dust-lgnitionproof for Class II & Ill, Division 1, Groups E-G and Class I, Zone 1, Group lIB Hazardous Locations with connections to a 700 Series sensor that is Intrinsically Safe for Class I, II & Ill, Groups A-G and Class I, Zone 1 Hazardous Locations.

7.3 Standards and Approvals (Continued)

7.3.3 ATEX Approvals - Install per 420-0004-024-CD

Universal IV Level Transmitter – Integral
II 1 G Ex ia IIC T4 Ga -40°C ≤ Tamb ≤ +75°C; IP66 (For models U**103**00-*-*)
II 2 G Ex d ia IIB T4 Gb -40°C ≤ Tamb ≤ +75°C; IP66 (For models U**104**00-*-*)
II 2 D Ex tb ia IIIC Db T90°C -40°C ≤ Tamb ≤ +75°C; IP66 (For models U**104**00-*-*)
Universal IV Level Transmitter – Remote (excluding models U**10***00-*-*)
II 1 G Ex ia IIC T4 -40°C ≤ Tamb ≤ +75°C; IP66 (For models U**103***0-*-*)
II 2 (1) G Ex d [ia] IIB T4 -40°C ≤ Tamb ≤ +75°C; IP66 (For models U**104***0-*-*)
II 2 (1) D Ex tb [ia] IIIC T90°C -40°C ≤ Tamb ≤ +75°C; IP66 (For models U**10****0-*-*)
700-*, Universal IV Sensors
II 1 G Ex ia IIC T2...T5 Ga -40°C ≤ Tamb ≤ +75°C
II 1 D Ex ia IIIC T300°C...T90°C Da -40°C ≤ Tamb ≤ +75°C

7.3.4 IECEx Approvals - Install per 420-0004-024-CD

Integral:
Ex ia IIC T4 Ga; Ex d ia IIB T4 Gb; Ex tb ia IIIC T90°C Db; -40°C ≤ Ta ≤ +75°C; IP66
Input Voltage: 13-30Vdc; 1W

Remote:
Ex ia IIC T4 Ga; Ex tb [ia] IIIC T90°C Db; Ex d [ia] IIB T4 Gb; Ex tb [ia] IIIC T90°C Db; -40°C ≤ Ta ≤ + 75°C; IP66
Input Voltage: 13-30Vdc; 1W

Remote Sensor:
Ex ia IIC T5 ... T2 Ga; Ex ia IIIC T90°C ... T300°C Da; -40°C ≤ Ta ≤ +75°C; IP66

Section 8: Control Drawings

8.1 ATEC / IECEX

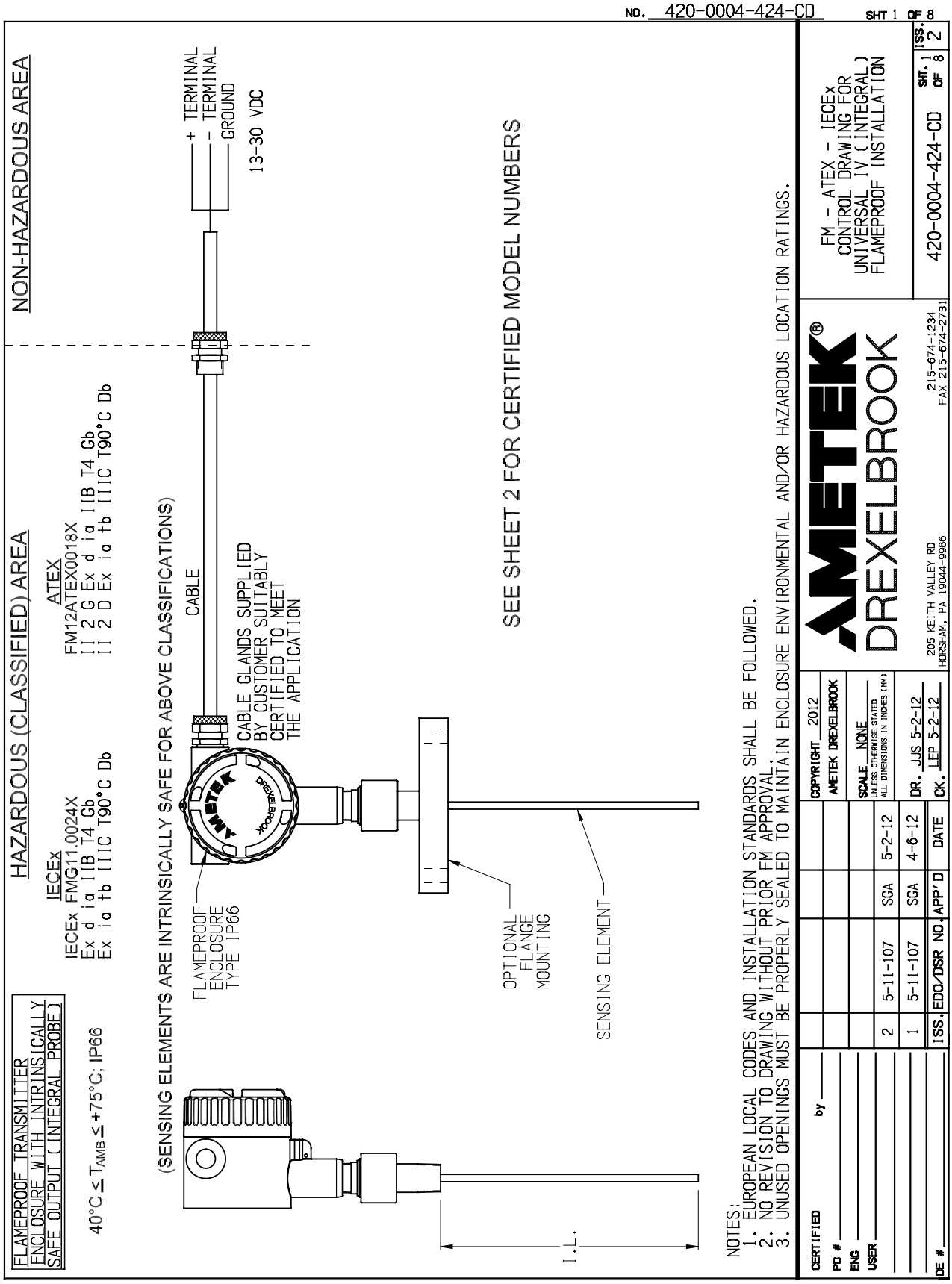

8.1 ATEC / IECEX (Continued)

NO. 420-0004-424-CD SHT 2 OF 8

SPECIFIC CONDITIONS FOR USE:
THE APPARATUS ENCLOSURE CONTAINS ALUMINUM AND IS CONSIDERED TO CONSTITUTE A POTENTIAL RISK OF IGNITION BY IMPACT OR FRICTION. CARE MUST BE TAKEN INTO ACCOUNT DURING INSTALLATION AND USE TO PREVENT IMPACT OR FRICTION.

CERTIFIED MODELS

Uab10cd000-e-f. Universal IV - Flameproof - Model Code

a = TYPE P, L, OR C.
b = FREQUENCY AND PHASING 0, 1, 2, OR 3
c = APPROVAL 4 (ATEX), 6 (IECEx)
d = ENTRIES 1 OR 2
e = SENSING ELEMENT 251, 252, 253, 254, 255, 256, 257, 258, 259, 260, 261, OR 262
f = 24 CHARACTER NUMBERING SYSTEM THAT DOES NOT AFFECT SAFETY

ISS.	EDD/DSR NO.	APP'D	DATE
2	5-11-107	SGA	5-2-12
1	5-11-107	SGA	4-6-12

CERTIFIED by ____
PO # ____
ENG ____
USER ____
DE # ____

COPYRIGHT 2012 AMETEK DREXELBROOK

SCALE NONE
UNLESS OTHERWISE STATED ALL DIMENSIONS IN INCHES (MM)
DR. JJS 5-2-12
CK. LEP 5-2-12

AMETEK® DREXELBROOK
205 KEITH VALLEY RD
HORSHAM, PA 19044-9986
215-674-1234
FAX 215-674-2731

FM - ATEX - IECEx
CONTROL DRAWING FOR
UNIVERSAL IV (INTEGRAL)
FLAMEPROOF INSTALLATION

420-0004-424-CD SHT. 2 OF 8 ISS. 2

8.1 ATEC / IECEX (Continued)

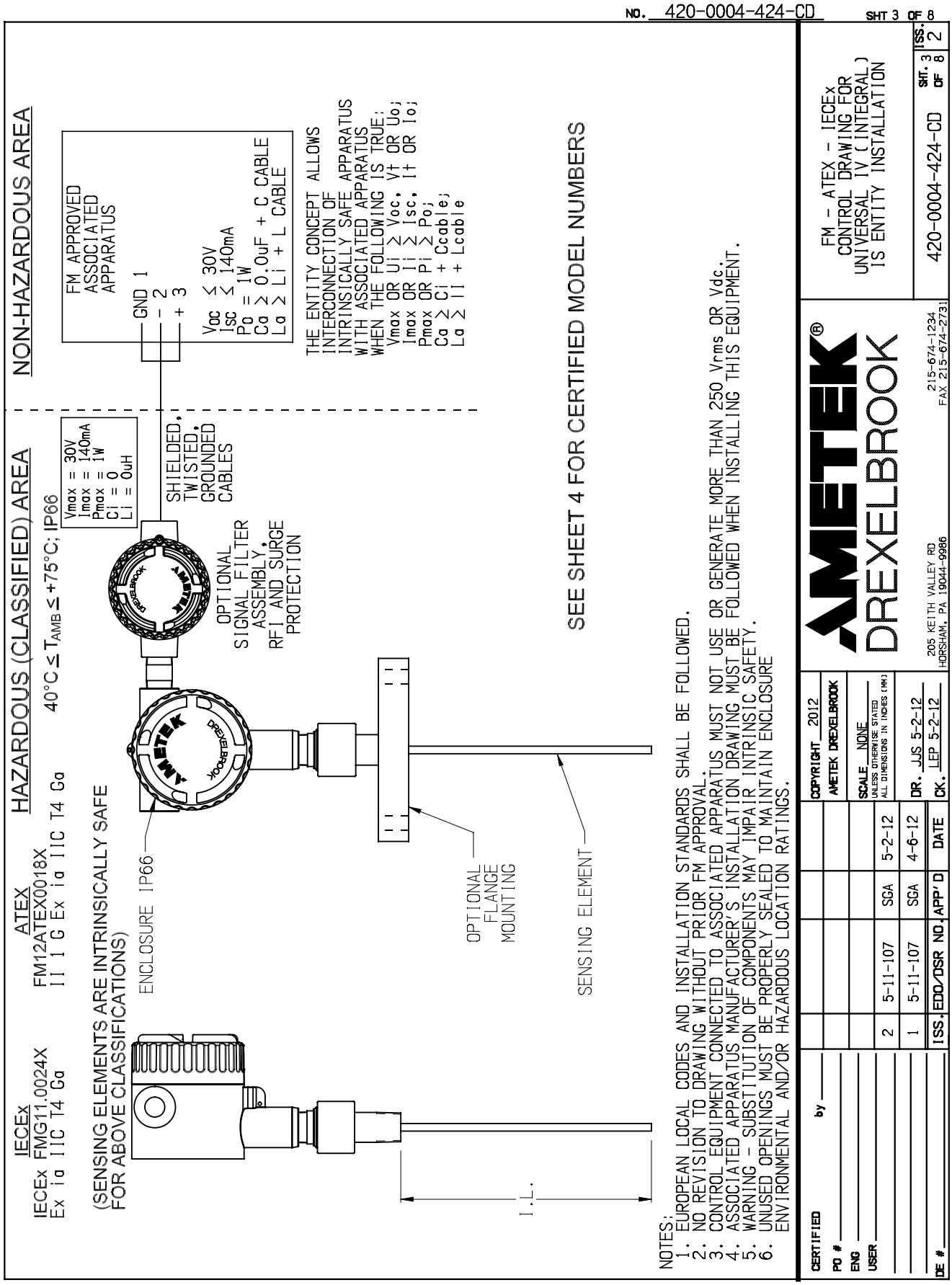

8.1 ATEC / IECEX (Continued)

SPECIFIC CONDITIONS FOR USE:
THE APPARATUS ENCLOSURE CONTAINS ALUMINUM AND IS CONSIDERED TO CONSTITUTE A POTENTIAL RISK OF IGNITION BY IMPACT OR FRICTION. CARE MUST BE TAKEN INTO ACCOUNT DURING INSTALLATION AND USE TO PREVENT IMPACT OR FRICTION.

CERTIFIED MODELS

Uab10cde00-f-g. Universal IV - Integral Intrinsically Safe - Model Code

a = TYPE P, L, OR C.
b = FREQUENCY AND PHASING 0, 1, 2, OR 3
c = APPROVAL 3 (ATEX), 5 (IECEx)
d = ENTRIES 1 OR 2
e = SURGE SUPPRESSION 0 OR 1
f = SENSING ELEMENT R00, R01, R02, R03, R04, R05, 251, 252, 253, 254, 255, 256, 257, 258, 259, 260, 261, 262, 301, 302, 303, 304, 305, 306, 307, 308, 309, 310, 311, 312, 313, 314, 315, 316, 317, 318, 319, 320, 321, 322, 323, 324, 325, 326, 327, 328, 329, 330, 331, 332, 333, 334, 335, 501, 502, 503, 504, 505, 506, 507, 508, 509, 510, 511, 512, 513, 601, 603, 604, 605, 606, 607, 608, 609, 610, 611, 613, 703, 705, 706, 708, 709, 713, 714, 715, 722, OR ZZZ*
g = 24 CHARACTER NUMBERING SYSTEM THAT DOES NOT AFFECT SAFETY

ZZZ = SPECIAL SENSING ELEMENT
700- ANY 7 DIGIT NUMERIC COMBINATION

NOTES:
1. MAXIMUM PROCESS TEMPERATURE 290°C
2. MAXIMUM SENSOR CAPACITANCE < 1uF
3. MAXIMUM INSERTION LENGTH *RIGID SENSOR* 30 FEET (9.144 METERS)
4. MAXIMUM INSERTION LENGTH *FLEXIBLE SENSOR* 2000 FEET (609.6 METERS)
5. SENSING ELEMENT ENCLOSURE IP66 (IP RATING DOES NOT APPLY TO SPECIAL SENSORS SUPPLIED WITHOUT A 285- SERIES SENSING ELEMENT ENCLOSURE).

2	5-11-107	SGA	5-2-12	
1	5-11-107	SGA	4-6-12	
ISS.	EDO/DSR NO.	APP'D	DATE	

CERTIFIED by
PO #
ENG
USER
DE #

COPYRIGHT 2012
AMETEK DREXELBROOK

SCALE NONE
UNLESS OTHERWISE STATED
ALL DIMENSIONS IN INCHES (MM)

DR. JJS 5-2-12
CK. LEP 5-2-12

AMETEK® DREXELBROOK
205 KEITH VALLEY RD
HORSHAM, PA 19044-9986
215-674-1234
FAX 215-674-2731

FM - ATEX - IECEx
CONTROL DRAWING FOR
UNIVERSAL IV (INTEGRAL)
IS ENTITY INSTALLATION

420-0004-424-CD SHT. 4 OF 8 ISS. 2

NO. 420-0004-424-CD SHT 4 OF 8

8.1 ATEC / IECEX (Continued)

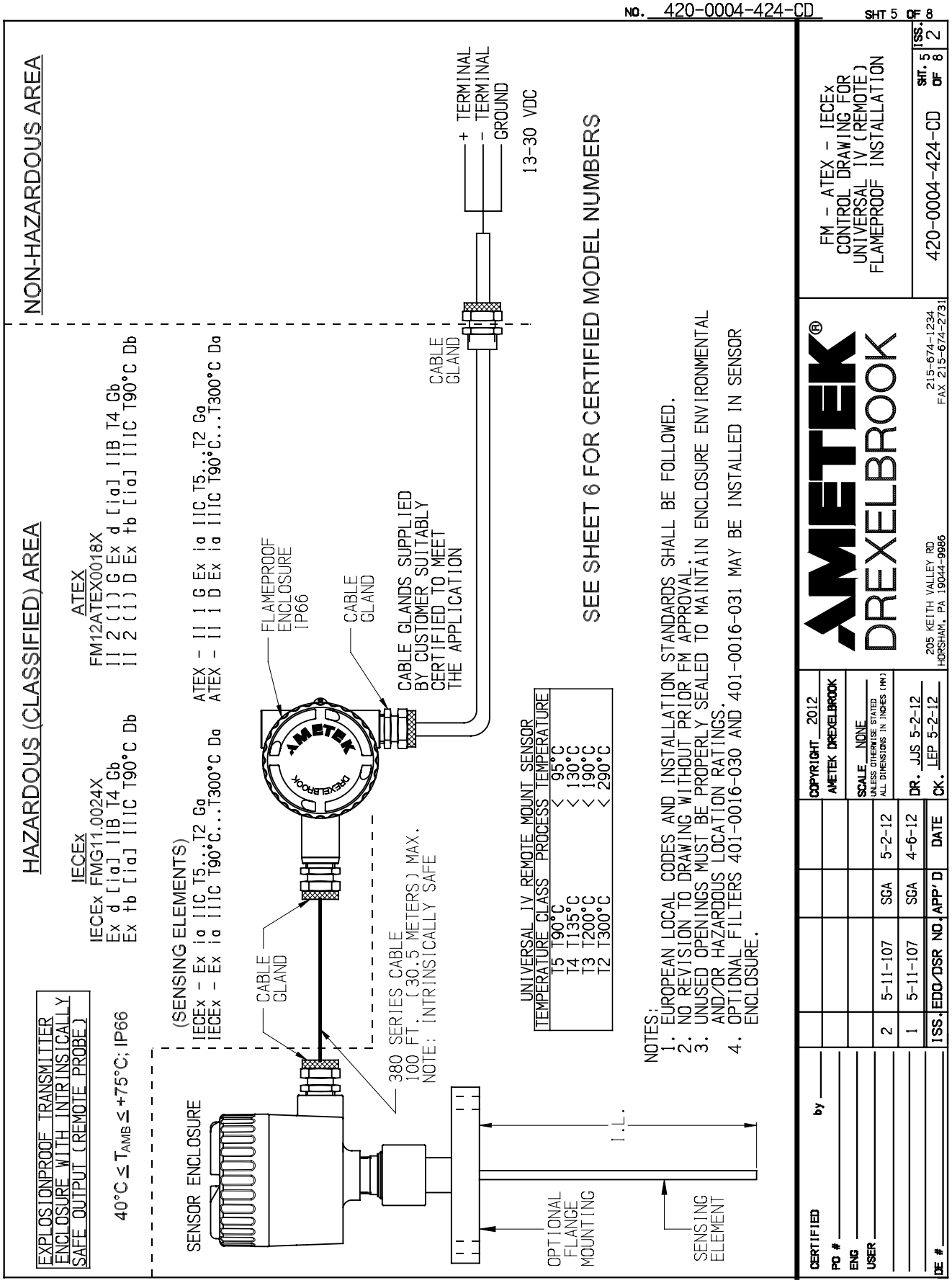

8.1 ATEC / IECEX (Continued)

SPECIFIC CONDITIONS FOR USE:
THE APPARATUS ENCLOSURE CONTAINS ALUMINUM AND IS CONSIDERED TO CONSTITUTE A POTENTIAL RISK OF IGNITION BY IMPACT OR FRICTION. CARE MUST BE TAKEN INTO ACCOUNT DURING INSTALLATION AND USE TO PREVENT IMPACT OR FRICTION.

CERTIFIED MODELS

Uab10cdef0-g-h. Universal IV - Remote Flameproof - Model Code

a = TYPE P, L, OR C.
b = FREQUENCY AND PHASING 0, 1, 2, OR 3
c = APPROVAL 4 (ATEX), 6 (IECEx)
d = ENTRIES 1 OR 2
e = SURGE SUPPRESSION 0, 4, OR D
f = REMOTE CONFIGURATION 1,2,3,4,5,6,7,8,9,A,B,C,D,E,F,G,H,J,K,L,M,N,P,R,S, OR Z
g = SENSING ELEMENT R09, 000, 101, 102, 103, 104, 105, 106, 107, 108, 109, 110, 111, 112, 113, 301, 302, 303, 304, 305, 306, 307, 308, 309, 310, 311, 312, 313, 314, 315, 316, 317, 318, 319, 320, 321, 322, 323, 324, 325, 326, 327, 328, 329, 330, 331, 332, 333, 334, 335, 501, 502, 503, 504, 505, 506, 507, 508, 509, 510, 513, 601, 603, 604, 605, 606, 607, 608, 609, 610, 611, 612, 613, 701, 702, 703, 704, 705, 706, 707, 708, 709, 710, 711, 712, 713, 714, 715, 716, 717, 718, 719, 720, 721, 722, 723, 724, 725, 726, 727, 728, 729, 730, 731, 732, 735, 736, 737, 738, 739, 740, 741, 742, 743, 744, 745, 746, 747, 748, 749, 750, 751, 752, OR ZZZ*
h = 24 CHARACTER NUMBERING SYSTEM THAT DOES NOT AFFECT SAFETY.

ZZZ = SPECIAL SENSING ELEMENT
700- ANY 7 DIGIT NUMERIC COMBINATION

NOTES:
1. MAXIMUM PROCESS TEMPERATURE 290°C
2. MAXIMUM SENSOR CAPACITANCE < 1uF
3. MAXIMUM INSERTION LENGTH *RIGID SENSOR* 30 FEET (9.144 METERS)
4. MAXIMUM INSERTION LENGTH *FLEXIBLE SENSOR* 2000 FEET (609.6 METERS)
5. SENSING ELEMENT ENCLOSURE IP66 (IP RATING DOES NOT APPLY TO SPECIAL SENSORS SUPPLIED WITHOUT A 285- SERIES SENSING ELEMENT ENCLOSURE).

CERTIFIED by
PO #
ENG
USER
DE #

ISS.	EDO/DSR NO.	APP'D	DATE
2	5-11-107	SGA	5-2-12
1	5-11-107	SGA	4-6-12

COPYRIGHT 2012
AMETEK DREXELBROOK

SCALE NONE
UNLESS OTHERWISE STATED
ALL DIMENSIONS IN INCHES (MM)

DR. JJS 5-2-12
CK. LEP 5-2-12

AMETEK® DREXELBROOK
205 KEITH VALLEY RD
HORSHAM, PA 19044-9986
215-674-1234
FAX 215-674-2731

FM - ATEX - IECEx
CONTROL DRAWING FOR
UNIVERSAL IV (REMOTE)
FLAMEPROOF INSTALLATION

420-0004-424-CD SHT. 6 OF 8 ISS. 2

NO. 420-0004-424-CD SHT 6 OF 8

8.1 ATEC / IECEX (Continued)

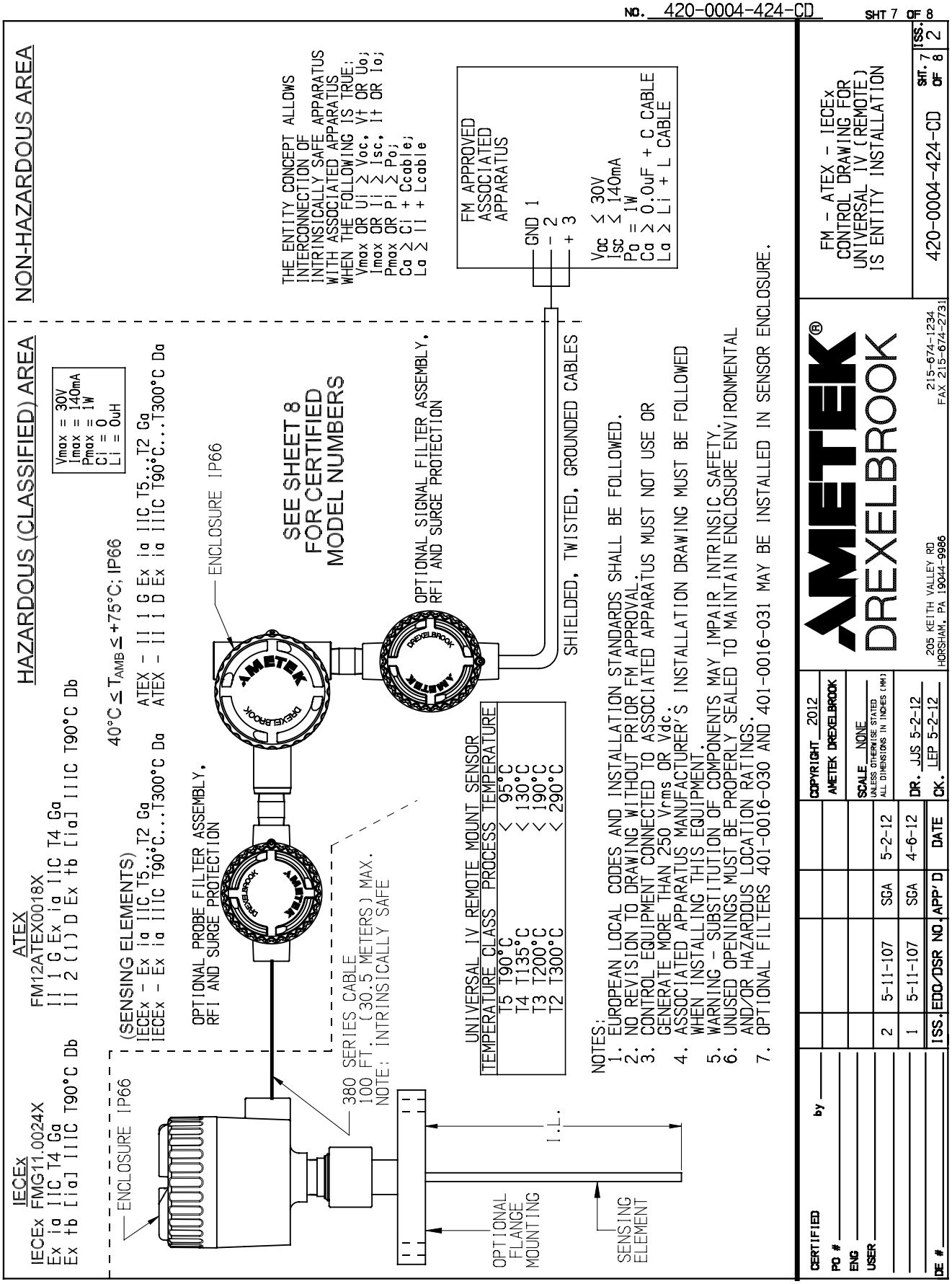

8.1 ATEC / IECEX (Continued)

NO. 420-0004-424-CD SHT 8 OF 8

SPECIFIC CONDITIONS FOR USE:
THE APPARATUS ENCLOSURE CONTAINS ALUMINUM AND IS CONSIDERED TO CONSTITUTE A POTENTIAL RISK OF IGNITION BY IMPACT OR FRICTION. CARE MUST BE TAKEN INTO ACCOUNT DURING INSTALLATION AND USE TO PREVENT IMPACT OR FRICTION.

CERTIFIED MODELS

Uab10cdef0-g-h. Universal IV - Remote Intrinsically Safe - Model Code

a = TYPE P, L, OR C.
b = FREQUENCY AND PHASING 0, 1, 2, OR 3
c = APPROVAL 3 (ATEX), 5 (IECEx)
d = ENTRIES 1 OR 2
e = SURGE SUPPRESSION 0, 1, 2, 3, 4, 5, 6, 7, OR D
f = REMOTE CONFIGURATION 1,2,3,4,5,6,7,8,9,A,B,C,D,E,F,G,H,J,K,L,M,N,P,R,S, OR Z
g = SENSING ELEMENT R09, 000, 101, 102, 103, 104, 105, 106, 107, 108, 109, 110, 111, 112, 113, 301, 302, 303, 304, 305, 306, 307, 308, 309, 310, 311, 312, 313, 314, 315, 316, 317, 318, 319, 320, 321, 322, 323, 324, 325, 326, 327, 328, 329, 330, 331, 332, 333, 334, 335, 501, 502, 503, 504, 505, 506, 507, 508, 509, 510, 513, 601, 603, 604, 605, 606, 607, 608, 609, 610, 611, 612, 613, 701, 702, 703, 704, 705, 706, 707, 708, 709, 710, 711, 712, 713, 714, 715, 716, 717, 718, 719, 720, 721, 722, 723, 724, 725, 726, 727, 728, 729, 730, 731, 732, 735, 736, 737, 738, 739, 740, 741, 742, 743, 744, 745, 746, 747, 748, 749, 750, 751, 752, OR ZZZ*
h = 24 CHARACTER NUMBERING SYSTEM THAT DOES NOT AFFECT SAFETY

ZZZ = SPECIAL SENSING ELEMENT
700- ANY 7 DIGIT NUMERIC COMBINATION

NOTES:
1. MAXIMUM PROCESS TEMPERATURE 290°C
2. MAXIMUM SENSOR CAPACITANCE < 1uF
3. MAXIMUM INSERTION LENGTH *RIGID SENSOR* 30 FEET (9.144 METERS)
4. MAXIMUM INSERTION LENGTH *FLEXIBLE SENSOR* 2000 FEET (609.6 METERS)
5. SENSING ELEMENT ENCLOSURE IP66 (IP RATING DOES NOT APPLY TO SPECIAL SENSORS SUPPLIED WITHOUT A 285- SERIES SENSING ELEMENT ENCLOSURE).

CERTIFIED by
PO #
ENG
USER
DE #

ISS.	EDO/DSR NO.	APP'D	DATE
2	5-11-107	SGA	5-2-12
1	5-11-107	SGA	4-6-12

COPYRIGHT 2012 AMETEK DREXELBROOK

SCALE NONE
UNLESS OTHERWISE STATED ALL DIMENSIONS IN INCHES (MM)
DR. JJS 5-2-12
CK. LEP 5-2-12

AMETEK® DREXELBROOK
205 KEITH VALLEY RD
HORSHAM, PA 19044-9986
215-674-1234
FAX 215-674-2731

FM - ATEX - IECEx
CONTROL DRAWING FOR
UNIVERSAL IV (REMOTE)
IS ENTITY INSTALLATION

420-0004-424-CD SHT. 8 OF 8 ISS. 2

8.2 FM US / FMC

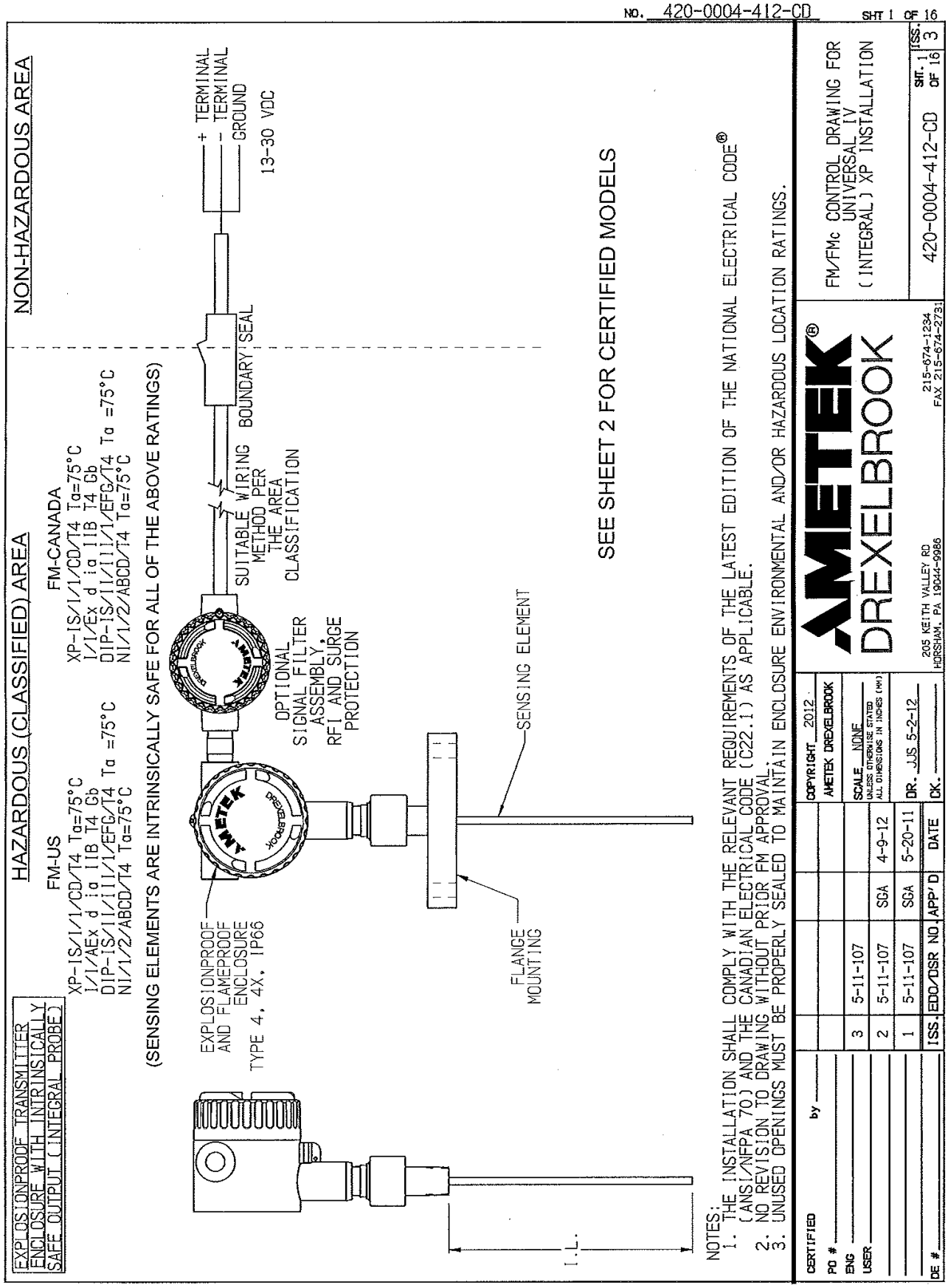
NO. 420-0004-412-CD
SHT 1 OF 16
NON-HAZARDOUS AREA
HAZARDOUS (CLASSIFIED) AREA
EXPLOSIONPROOF TRANSMITTER ENCLOSURE WITH INTRINSICALLY SAFE OUTPUT (INTEGRAL PROBE)
FM-US
XP-IS/I/1/CD/T4 Ta=75°C
I/1/AEx d ia IIB T4 Gb
DIP-IS/II/III/1/EFG/T4 Ta =75°C
NI/1/2/ABCD/T4 Ta=75°C
FM-CANADA
XP-IS/I/1/CD/T4 Ta=75°C
I/1/Ex d ia IIB T4 Gb
DIP-IS/II/III/1/EFG/T4 Ta =75°C
NI/1/2/ABCD/T4 Ta=75°C
(SENSING ELEMENTS ARE INTRINSICALLY SAFE FOR ALL OF THE ABOVE RATINGS)
+ TERMINAL
- TERMINAL
GROUND
13-30 VDC
BOUNDARY SEAL
SUITABLE WIRING METHOD PER THE AREA CLASSIFICATION
OPTIONAL SIGNAL FILTER ASSEMBLY, RFI AND SURGE PROTECTION
EXPLOSIONPROOF AND FLAMEPROOF ENCLOSURE TYPE 4, 4X, IP66
FLANGE MOUNTING
SENSING ELEMENT
I.L.
SEE SHEET 2 FOR CERTIFIED MODELS
NOTES:
1. THE INSTALLATION SHALL COMPLY WITH THE RELEVANT REQUIREMENTS OF THE LATEST EDITION OF THE NATIONAL ELECTRICAL CODE® (ANSI/NFPA 70) AND THE CANADIAN ELECTRICAL CODE (C22.1) AS APPLICABLE.
2. NO REVISION TO DRAWING WITHOUT PRIOR FM APPROVAL.
3. UNUSED OPENINGS MUST BE PROPERLY SEALED TO MAINTAIN ENCLOSURE ENVIRONMENTAL AND/OR HAZARDOUS LOCATION RATINGS.
CERTIFIED by
PO #
ENG
USER
DE #
ISS. EDO/DSR NO. APP'D DATE
3 5-11-107
2 5-11-107 SGA 4-9-12
1 5-11-107 SGA 5-20-11
COPYRIGHT 2012 AMETEK DREXELBROOK
SCALE NONE
UNLESS OTHERWISE STATED ALL DIMENSIONS IN INCHES (MM)
DR. JJS 5-2-12
CK.
AMETEK®
DREXELBROOK
205 KEITH VALLEY RD
HORSHAM, PA 19044-9986
215-674-1234
FAX 215-674-2731
FM/FMc CONTROL DRAWING FOR UNIVERSAL IV (INTEGRAL) XP INSTALLATION
420-0004-412-CD
SHT. 1 OF 16
ISS. 3

8.2 FM US / FMC (Continued)

NO. 420-0004-412-CD SHT 2 OF 16

SPECIFIC CONDITIONS FOR USE:
THE APPARATUS ENCLOSURE CONTAINS ALUMINUM AND IS CONSIDERED TO CONSTITUTE A POTENTIAL RISK OF IGNITION BY IMPACT OR FRICTION. CARE MUST BE TAKEN INTO ACCOUNT DURING INSTALLATION AND USE TO PREVENT IMPACT OR FRICTION.

CERTIFIED MODELS

Uab102cd00ef

a = TYPE P, L, OR C.
b = FREQUENCY AND PHASING 0, 1, 2, 3
c = ENTRIES 0, 2
d = SURGE/NOISE SUPRESSION 0, 1
e = SENSING ELEMENT: R111, R112, R113, R114, R115, 251, 252, 253, 254, 255, 256, 257, 258, 259, 260, 261, 262, 301, 302, 303, 304, 305, 306, 307, 308, 309, 310, 311, 312, 313, 314, 315, 316, 317, 318, 319, 320, 321, 322, 323, 324, 325, 326, 327, 502, 503, 504, 505, 506, 507, 508, 510, 511, 512

f = 24 CHARACTER NUMBERING SYSTEM THAT DOES NOT AFFECT SAFETY

ISS.	EDC/DSR NO.	APP'D	DATE
3	5-11-107	BGA	5-3-12
2	5-11-107	SGA	4-9-12
1	5-11-107	SGA	5-20-11

CERTIFIED by ____
PO # ____
ENG ____
USER ____
DE # ____

COPYRIGHT 2012 AMETEK DREXELBROOK

SCALE NONE
UNLESS OTHERWISE STATED ALL DIMENSIONS IN INCHES (MM)

DR. JJS 5-2-12
CK. ____

AMETEK® DREXELBROOK
205 KEITH VALLEY RD
HORSHAM, PA 19044-9986
215-674-1234
FAX 215-674-2731

FM/FMc CONTROL DRAWING FOR UNIVERSAL IV (INTEGRAL) XP INSTALLATION

420-0004-412-CD SHT. 2 OF 16 ISS. 3

8.2 FM US / FMC (Continued)

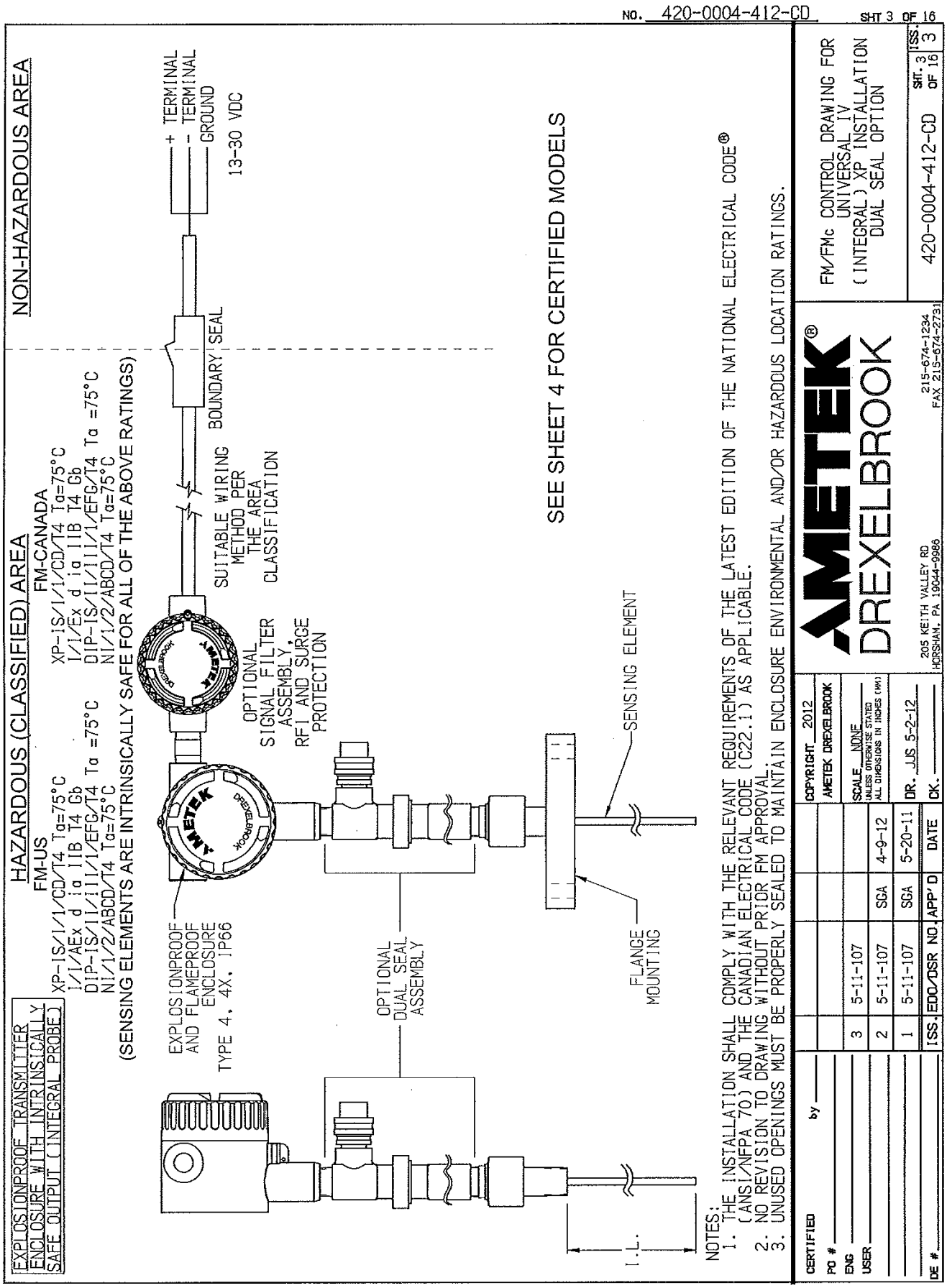

8.2 FM US / FMC (Continued)

NO. 420-0004-412-CD SHT 4 OF 16

SPECIFIC CONDITIONS FOR USE:
THE APPARATUS ENCLOSURE CONTAINS ALUMINUM AND IS CONSIDERED TO CONSTITUTE A POTENTIAL RISK OF IGNITION BY IMPACT OR FRICTION. CARE MUST BE TAKEN INTO ACCOUNT DURING INSTALLATION AND USE TO PREVENT IMPACT OR FRICTION.

CERTIFIED MODELS

Uab102cd01ef

a = TYPE P, L, OR C.
b = FREQUENCY AND PHASING 0, 1, 2, 3
c = ENTRIES 0, 2
d = SURGE/NOISE SUPRESSION 0, 1
e = SENSING ELEMENT: 101, 102, 103, 104, 105, 106, 107, 108, 109, 110, 111,
112, 113, 301, 302, 303, 304, 305, 306, 307, 308, 309,
310, 311, 312, 313, 314, 315, 316, 317, 318, 319, 320,
321, 322, 323, 324, 325, 326, 327
f = 24 CHARACTER NUMBERING SYSTEM THAT DOES NOT AFFECT SAFETY

ISS.	EDO/DSR NO.	APP'D	DATE
3	5-11-107	SiA	5-3-12
2	5-11-107	SGA	4-9-12
1	5-11-107	SGA	5-20-11

CERTIFIED by
PO #
ENG
USER
DE #

COPYRIGHT 2012
AMETEK DREXELBROOK

SCALE NONE
UNLESS OTHERWISE STATED ALL DIMENSIONS IN INCHES (MM)
DR. JJS 5-2-12
CK.

AMETEK®
DREXELBROOK
205 KEITH VALLEY RD
HORSHAM, PA 19044-9996
215-674-1234
FAX 215-672-2731

FM/FMc CONTROL DRAWING FOR UNIVERSAL IV (INTEGRAL) XP INSTALLATION DUAL SEAL OPTION

420-0004-412-CD SHT. 4 OF 16 ISS. 3

8.2 FM US / FMC (Continued)

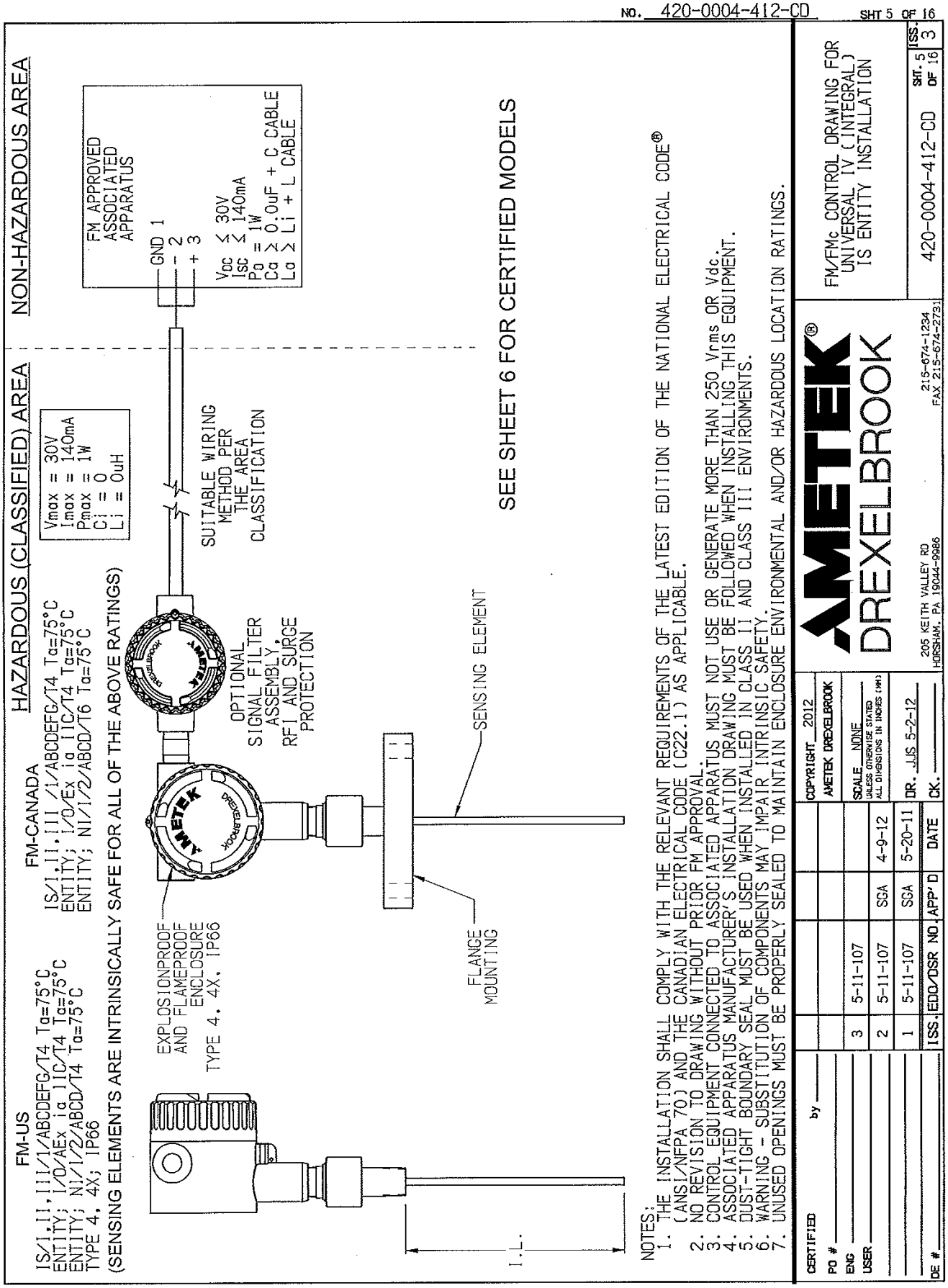

8.2 FM US / FMC (Continued)

SPECIFIC CONDITIONS FOR USE:
THE APPARATUS ENCLOSURE CONTAINS ALUMINUM AND IS CONSIDERED TO CONSTITUTE A POTENTIAL RISK OF IGNITION BY IMPACT OR FRICTION. CARE MUST BE TAKEN INTO ACCOUNT DURING INSTALLATION AND USE TO PREVENT IMPACT OR FRICTION.

CERTIFIED MODELS

Uab101cd00ef

a = TYPE P, L, OR C.
b = FREQUENCY AND PHASING 0, 1, 2, 3
c = ENTRIES 0, 2
d = SURGE/NOISE SUPRESSION 0, 1
e = SENSING ELEMENT: R00, R01, R02, R03, R04, R05, 251, 252, 253, 254, 255, 256, 257, 258, 259, 260, 261, 262, 301, 302, 303, 304, 305, 306, 307, 308, 309, 310, 311, 312, 313, 314, 315, 316, 317, 318, 319, 320, 321, 322, 323, 324, 325, 326, 327, 328, 329, 330, 331, 332, 333, 334, 335, 501, 502, 503, 504, 505, 506, 507, 508, 509, 510, 511, 512, 513, 601, 603, 604, 605, 606, 6-7, 608, 609, 610, 611, 613, 703, 705, 706, 708, 709, 713, 714, 715, 722, ZZZ*
f = 24 CHARACTER NUMBERING SYSTEM THAT DOES NOT AFFECT SAFETY

*ZZZ = SPECIAL SENSING ELEMENT
700- ANY 7 DIGIT NUMERIC COMBINATION

NOTES:
1. MAXIMUM PROCESS TEMPERATURE 290°C
2. MAXIMUM SENSOR CAPACITANCE < 1uF
3. MAXIMUM INSERTION LENGTH *RIGID SENSOR* 30 FEET (9.144 METERS)
4. MAXIMUM INSERTION LENGTH *FLEXIBLE SENSOR* 2000 FEET (609.6 METERS)
5. SENSING ELEMENT ENCLOSURE IP66 (IP RATING DOES NOT APPLY TO SPECIAL SENSORS SUPPLIED WITHOUT A 285- SERIES SENSING ELEMENT ENCLOSURE).

CERTIFIED by
PO #
ENG
USER
DE #

ISS.	EDO/DSR NO.	APP'D	DATE
3	5-11-107	SGA	5-3-12
2	5-11-107	SGA	4-9-12
1	5-11-107	SGA	5-20-11

COPYRIGHT 2012
AMETEK DREXELBROOK
SCALE NONE
UNLESS OTHERWISE STATED
ALL DIMENSIONS IN INCHES (MM)
DR. JJS 5-2-12
CK.

AMETEK® DREXELBROOK
205 KEITH VALLEY RD
HORSHAM, PA 19044-9986
215-674-1234
FAX 215-674-2731

FM/FMc CONTROL DRAWING FOR UNIVERSAL IV (INTEGRAL) IS ENTITY INSTALLATION

420-0004-412-CD SHT. 6 OF 16 ISS. 3

NO. 420-0004-412-CD SHT 6 OF 16

8.2 FM US / FMC (Continued)

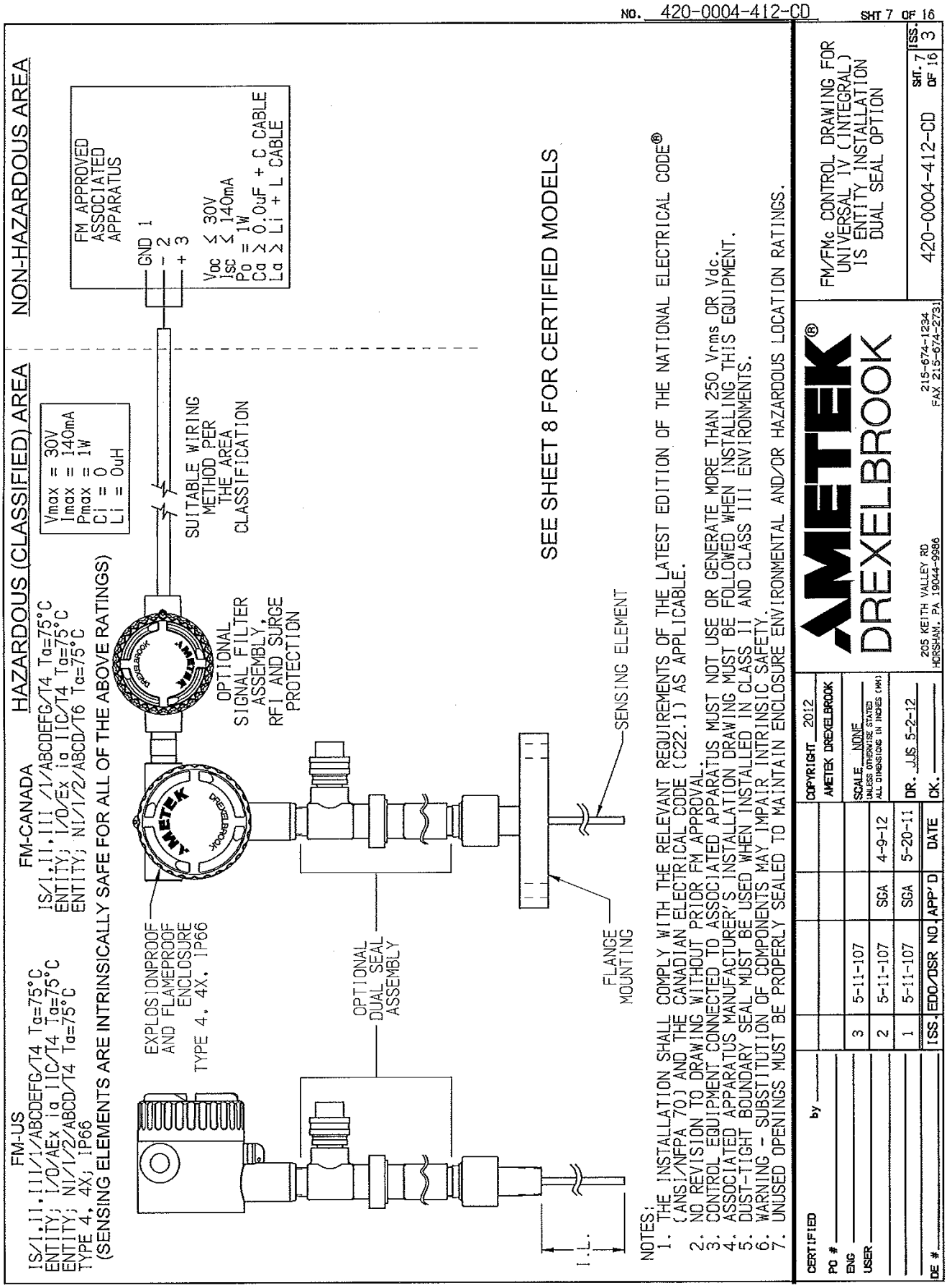

8.2 FM US / FMC (Continued)

NO. 420-0004-412-CD SHT 8 OF 16

SPECIFIC CONDITIONS FOR USE:
THE APPARATUS ENCLOSURE CONTAINS ALUMINUM AND IS CONSIDERED TO CONSTITUTE A POTENTIAL RISK OF IGNITION BY IMPACT OR FRICTION. CARE MUST BE TAKEN INTO ACCOUNT DURING INSTALLATION AND USE TO PREVENT IMPACT OR FRICTION.

CERTIFIED MODELS

Uab101cd01ef

a = TYPE P, L, OR C.
b = FREQUENCY AND PHASING 0, 1, 2, 3
c = ENTRIES 0, 2
d = SURGE/NOISE SUPRESSION 0, 1
e = SENSING ELEMENT: 101, 102, 103, 104, 105, 106, 107, 108, 109, 110, 111,
112, 113, 301, 302, 303, 304, 305, 306, 307, 308, 309,
310, 311, 312, 313, 314, 315, 316, 317, 318, 319, 320,
321, 322, 323, 324, 325, 326, 327, 328, 329, 330, 331,
332, 333, 334, 335, 601, 603, 604, 605, 606, 607, 608,
609, 610, 611, 613

f = 24 CHARACTER NUMBERING SYSTEM THAT DOES NOT AFFECT SAFETY

ISS.	EDD/DSR NO.	APP'D	DATE
3	5-11-107	KA	5-3-12
2	5-11-107	SGA	4-9-12
1	5-11-107	SGA	5-20-11

CERTIFIED
PO #
ENG
USER
DE #
by

COPYRIGHT 2012 AMETEK DREXELBROOK

SCALE NONE UNLESS OTHERWISE STATED ALL DIMENSIONS IN INCHES (MM)

DR. JJS 5-2-12
CK.

AMETEK® DREXELBROOK
205 KEITH VALLEY RD
HORSHAM, PA 19044-9986
215-674-1234
FAX 215-674-2731

FM/FMc CONTROL DRAWING FOR UNIVERSAL IV (INTEGRAL) IS ENTITY INSTALLATION DUAL SEAL OPTION

420-0004-412-CD SHT. 8 OF 16 ISS. 3

8.2 FM US / FMC (Continued)

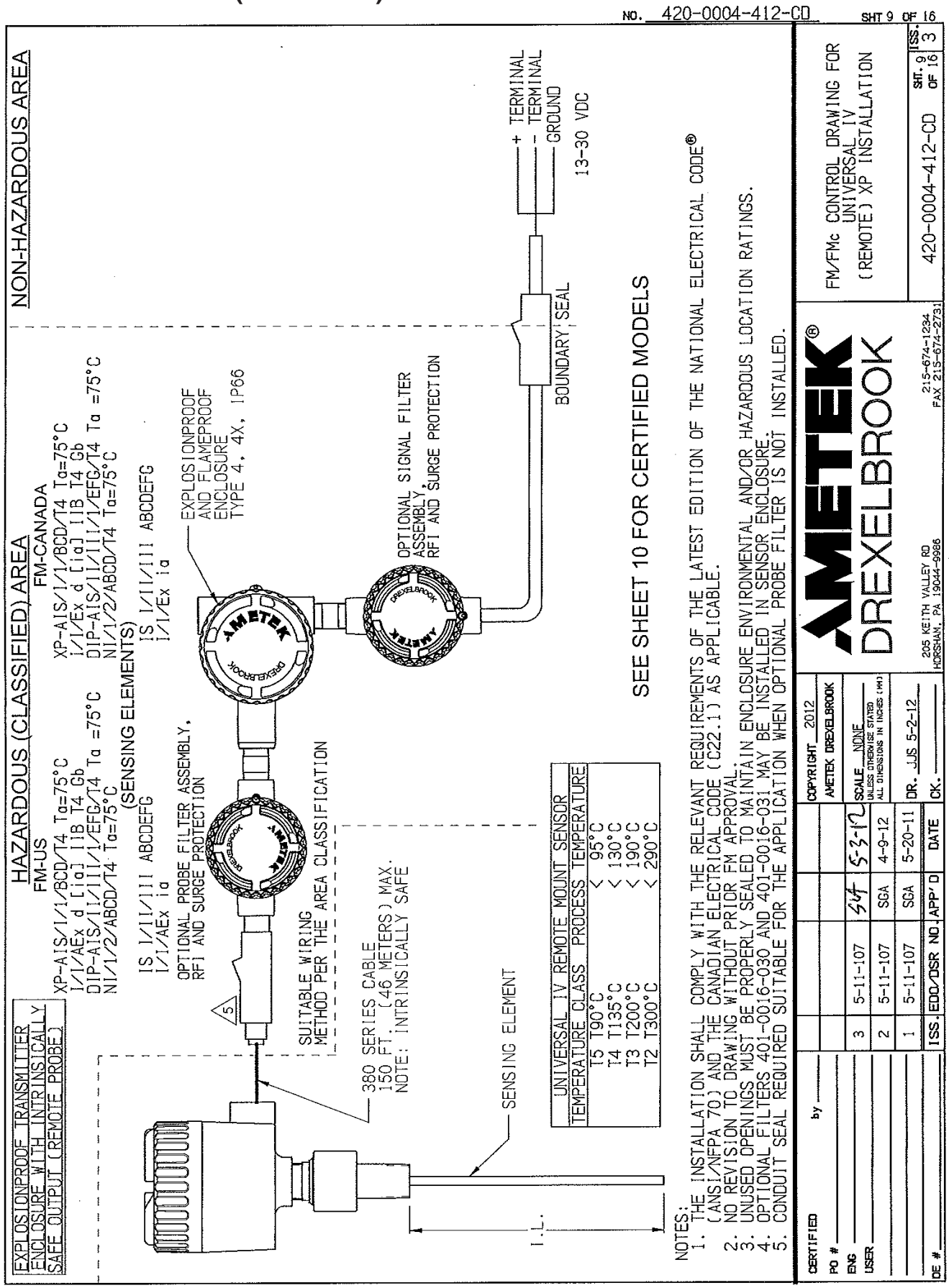

8.2 FM US / FMC (Continued)

SPECIFIC CONDITIONS FOR USE:
THE APPARATUS ENCLOSURE CONTAINS ALUMINUM AND IS CONSIDERED TO CONSTITUTE A POTENTIAL RISK OF IGNITION BY IMPACT OR FRICTION. CARE MUST BE TAKEN INTO ACCOUNT DURING INSTALLATION AND USE TO PREVENT IMPACT OR FRICTION.

CERTIFIED MODELS

Uab102cde0fg

a = TYPE P, L, OR C.
b = FREQUENCY AND PHASING 0, 1, 2, 3
c = ENTRIES 0, 2
d = SURGE/NOISE SUPRESSION 0, 1, 2, 3, 4, 5, 6, 7, D
e = CABLE OPTIONS 1,2,3,4,5,6,7,8,9,A,B,C,D,E,F,G,H,J,K,L,M,N,P,R,S,Z
f = SENSING ELEMENT: R09, 000, 101, 102, 103, 104, 105, 106, 107, 108, 109, 110, 111, 112, 113, 301, 302, 303, 304, 305, 306, 307, 308, 309, 310, 311, 312, 313, 314, 315, 316, 317, 318, 319, 320, 321, 322, 323, 324, 325, 326, 327, 328, 329, 330, 331, 332, 333, 334, 335, 501, 502, 503, 504, 505, 506, 507, 508, 509, 510, 513, 601, 603, 604, 605, 606, 607, 608, 609, 610, 611, 612, 613, 701, 702, 703, 704, 705, 706, 707, 708, 709, 710, 711, 712, 713, 714, 715, 716, 717, 718, 719, 720, 721, 722, 723, 724, 725, 726, 727, 728, 729, 730, 731, 732, 735, 736, 737, 738, 739, 740, 741, 742, 743, 744, 745, 746, 747, 748, 749, 750, 751, 752, ZZZ*
g = 24 CHARACTER NUMBERING SYSTEM THAT DOES NOT AFFECT SAFETY

*ZZZ = SPECIAL SENSING ELEMENT
700- ANY 7 DIGIT NUMERIC COMBINATION

NOTES:
1. MAXIMUM PROCESS TEMPERATURE 290°C
2. MAXIMUM SENSOR CAPACITANCE < 1uF
3. MAXIMUM INSERTION LENGTH *RIGID SENSOR* 30 FEET (9.144 METERS)
4. MAXIMUM INSERTION LENGTH *FLEXIBLE SENSOR* 2000 FEET (609.6 METERS)
5. SENSING ELEMENT ENCLOSURE IP66 (IP RATING DOES NOT APPLY TO SPECIAL SENSORS SUPPLIED WITHOUT A 285- SERIES SENSING ELEMENT ENCLOSURE).

CERTIFIED by
PO #
ENG
USER
DE #

ISS.	EDO/DSR NO.	APP'D	DATE
3	5-11-107	SGA	5-3-12
2	5-11-107	SGA	4-9-12
1	5-11-107	SGA	5-20-11

COPYRIGHT 2012
AMETEK DREXELBROOK
SCALE NONE
UNLESS OTHERWISE STATED ALL DIMENSIONS IN INCHES (MM)
DR. JJS 5-2-12
CK.

AMETEK® DREXELBROOK
205 KEITH VALLEY RD
HORSHAM, PA 19044-9986
215-674-1234
FAX 215-674-2731

FM/FMc CONTROL DRAWING FOR UNIVERSAL IV (REMOTE) XP INSTALLATION

420-0004-412-CD SHT.10 OF 16 ISS. 3

NO. 420-0004-412-CD SHT 10 OF 16

8.2 FM US / FMC (Continued)

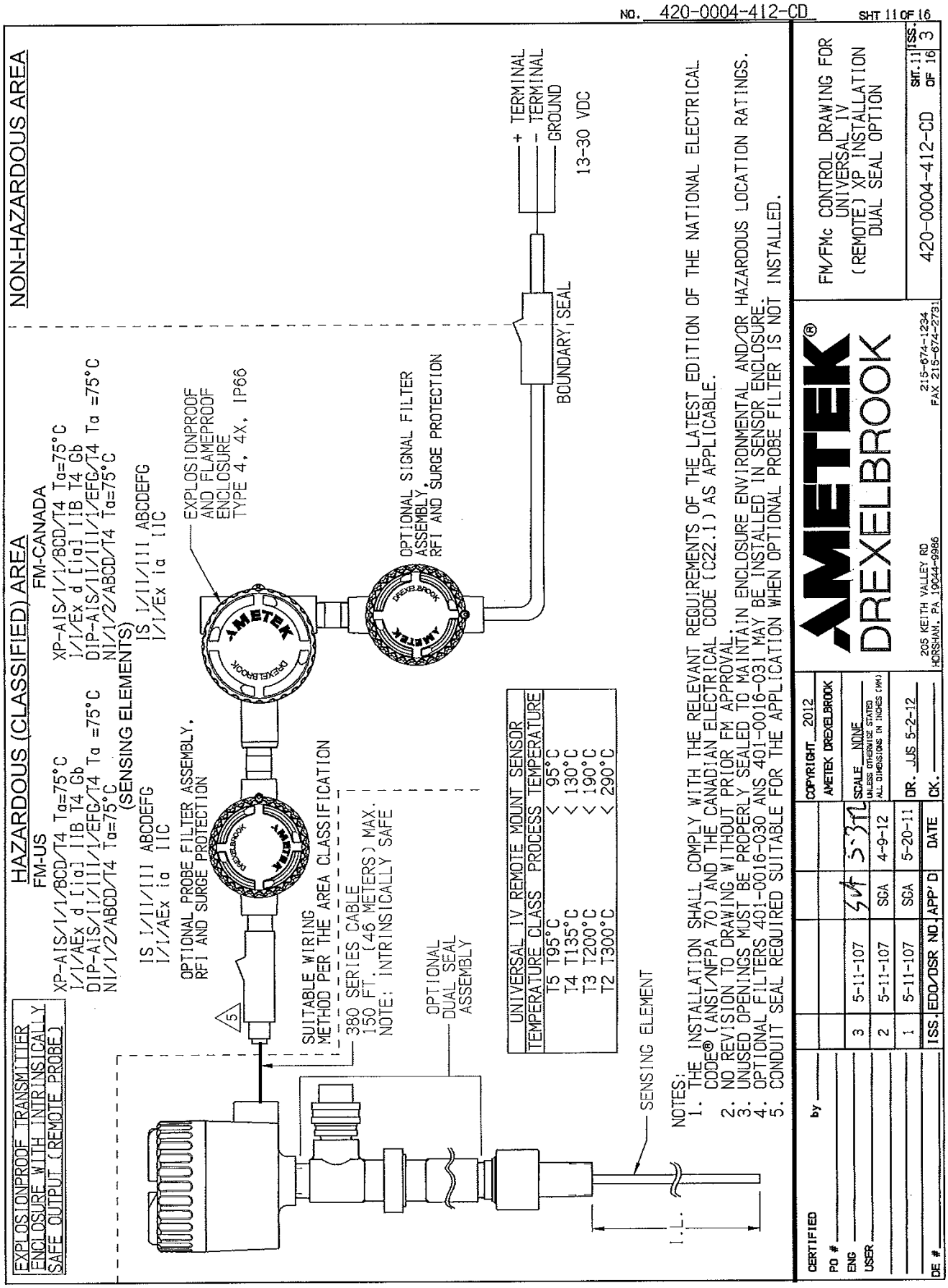

8.2 FM US / FMC (Continued)

NO. 420-0004-412-CD SHT 12 OF 16

SPECIFIC CONDITIONS FOR USE:
THE APPARATUS ENCLOSURE CONTAINS ALUMINUM AND IS CONSIDERED TO CONSTITUTE A POTENTIAL RISK OF IGNITION BY IMPACT OR FRICTION. CARE MUST BE TAKEN INTO ACCOUNT DURING INSTALLATION AND USE TO PREVENT IMPACT OR FRICTION.

CERTIFIED MODELS

Uab102cde1fg

a = TYPE P, L, OR C.
b = FREQUENCY AND PHASING 0, 1, 2, 3
c = ENTRIES 0, 2
d = SURGE/NOISE SUPRESSION 0, 2, 3, 4, 5, 6, 7, D
e = CABLE OPTIONS: 1,2,3,4,5,6,7,8,9,A,C,B,D,E,F,G,H,J,K,L,M,N,P,R,S,Z
f = SENSING ELEMENT: 101, 102, 103, 104, 105, 106, 107, 108, 109, 110, 111,
112, 113, 301, 302, 303, 304, 305, 306, 307, 308, 309,
310, 311, 312, 313, 314, 315, 316, 317, 318, 319, 320,
321, 322, 323, 324, 325, 326, 327, 328, 329, 330, 331,
332, 333, 334, 335, 601, 603, 604, 605, 606, 607, 608,
609, 610, 611, 612, 613

g = 24 CHARACTER NUMBERING SYSTEM THAT DOES NOT AFFECT SAFETY

ISS.	EDD/DSR NO.	APP'D	DATE
3	5-11-107	SGA	5-3-12
2	5-11-107	SGA	4-9-12
1	5-11-107	SGA	5-20-11

CERTIFIED by ____
PO # ____
ENG ____
USER ____
DE # ____

COPYRIGHT 2012 AMETEK DREXELBROOK

SCALE NONE
UNLESS OTHERWISE STATED ALL DIMENSIONS IN INCHES (MM)

DR. JJS 5-2-12
CK. ____

AMETEK® DREXELBROOK
205 KEITH VALLEY RD
HORSHAM, PA 19044-9986
215-674-1234
FAX 215-674-2731

FM/FMc CONTROL DRAWING FOR UNIVERSAL IV (REMOTE) XP INSTALLATION DUAL SEAL OPTION

420-0004-412-CD SHT. 12 OF 16 ISS. 3

8.2 FM US / FMC (Continued)

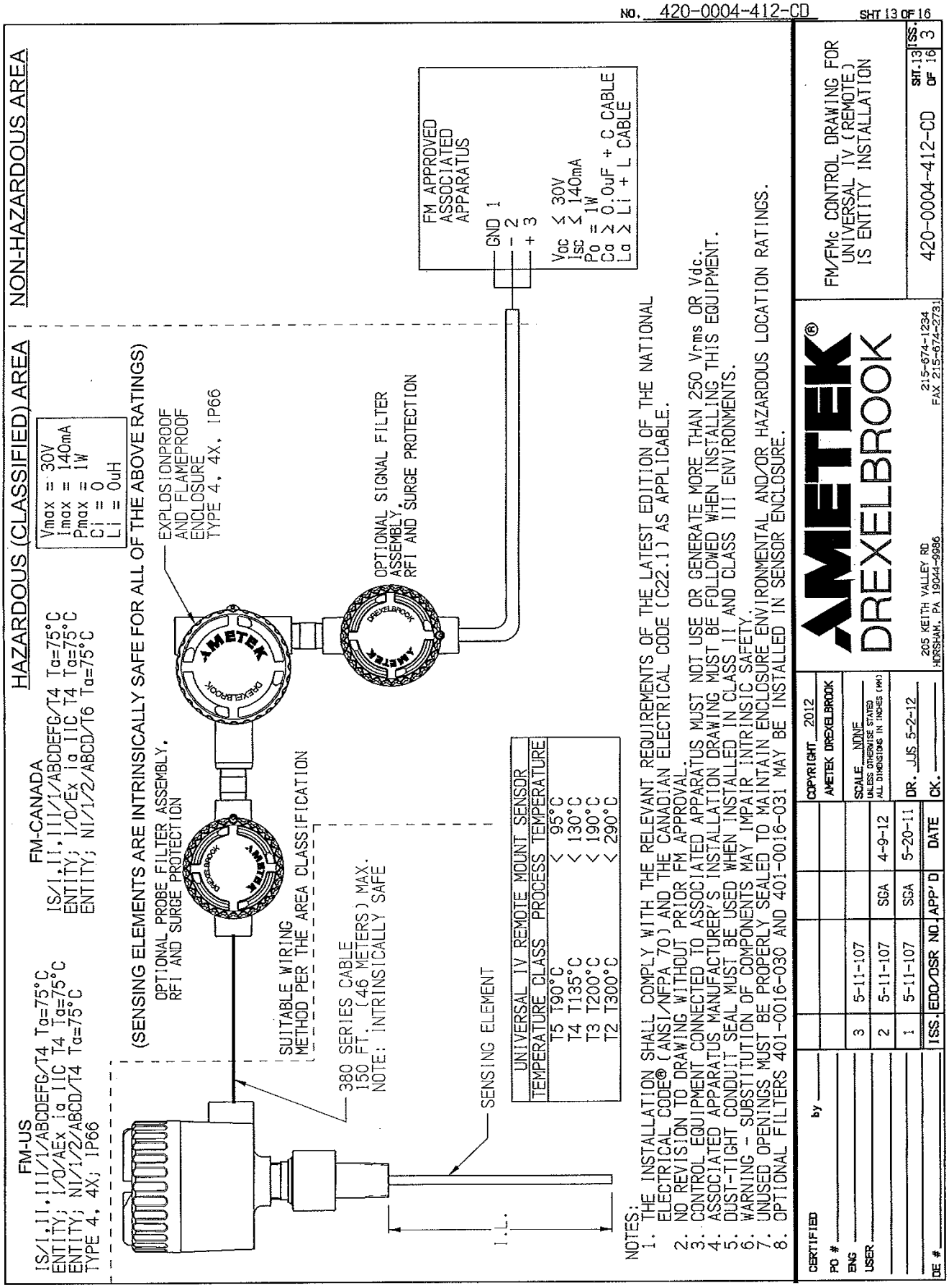

8.2 FM US / FMC (Continued)

SPECIFIC CONDITIONS FOR USE:
THE APPARATUS ENCLOSURE CONTAINS ALUMINUM AND IS CONSIDERED TO CONSTITUTE A POTENTIAL RISK OF IGNITION BY IMPACT OR FRICTION. CARE MUST BE TAKEN INTO ACCOUNT DURING INSTALLATION AND USE TO PREVENT IMPACT OR FRICTION.

CERTIFIED MODELS

Uab101cde0fg

a = TYPE P, L, OR C.
b = FREQUENCY AND PHASING 0, 1, 2, 3
c = ENTRIES 0, 2
d = SURGE/NOISE SUPRESSION 0, 1, 2, 3, 4, 5, 6, 7, D
e = CABLE OPTIONS 1,2,3,4,5,6,7,8,9,A,B,C,D,E,F,G,H,J,K,L,M,N,P,R,S,Z
f = SENSING ELEMENT: R09, 000, 101, 102, 103, 104, 105, 106, 107, 108, 109, 110, 111, 112, 113, 301, 302, 303, 304, 305, 306, 307, 308, 309, 310, 311, 312, 313, 314, 315, 316, 317, 318, 319, 320, 321, 322, 323, 324, 325, 326, 327, 328, 329, 330, 331, 332, 333, 334, 335, 501, 502, 503, 504, 505, 506, 507, 508, 509, 510, 513, 601, 603, 604, 605, 606, 607, 608, 609, 610, 611, 612, 613, 701, 702, 703, 704, 705, 706, 707, 708, 709, 710, 711, 712, 713, 714, 715, 716, 717, 718, 719, 720, 721, 722, 723, 724, 725, 726, 727, 728, 729, 730, 731, 732, 735, 736, 737, 738, 739, 740, 741, 742, 743, 744, 745, 746, 747, 748, 749, 750, 751, 752, ZZZ*
g = 24 CHARACTER NUMBERING SYSTEM THAT DOES NOT AFFECT SAFETY

*ZZZ = SPECIAL SENSING ELEMENT
700- ANY 7 DIGIT NUMERIC COMBINATION

NOTES:
1. MAXIMUM PROCESS TEMPERATURE 290°C
2. MAXIMUM SENSOR CAPACITANCE < 1uF
3. MAXIMUM INSERTION LENGTH *RIGID SENSOR* 30 FEET (9.144 METERS)
4. MAXIMUM INSERTION LENGTH *FLEXIBLE SENSOR* 2000 FEET (609.6 METERS)
5. SENSING ELEMENT ENCLOSURE IP66 (IP RATING DOES NOT APPLY TO SPECIAL SENSORS SUPPLIED WITHOUT A 285- SERIES SENSING ELEMENT ENCLOSURE).

CERTIFIED by
PO #
ENG
USER
DE #

ISS.	EDO/DSR NO.	APP'D	DATE
3	5-11-107	SGA	5-3-12
2	5-11-107	SGA	4-9-12
1	5-11-107	SGA	5-20-11

COPYRIGHT 2012
AMETEK DREXELBROOK

SCALE NONE
UNLESS OTHERWISE STATED ALL DIMENSIONS IN INCHES (MM)
DR. JJS 5-2-12
CK.

AMETEK® DREXELBROOK
205 KEITH VALLEY RD
HORSHAM, PA 19044-9986
215-674-1234
FAX 215-674-2731

FM/FMc CONTROL DRAWING FOR UNIVERSAL IV (REMOTE) IS ENTITY INSTALLATION

420-0004-412-CD
SHT. 14 OF 16
ISS. 3

NO. 420-0004-412-CD
SHT 14 OF 16

8.2 FM US / FMC (Continued)

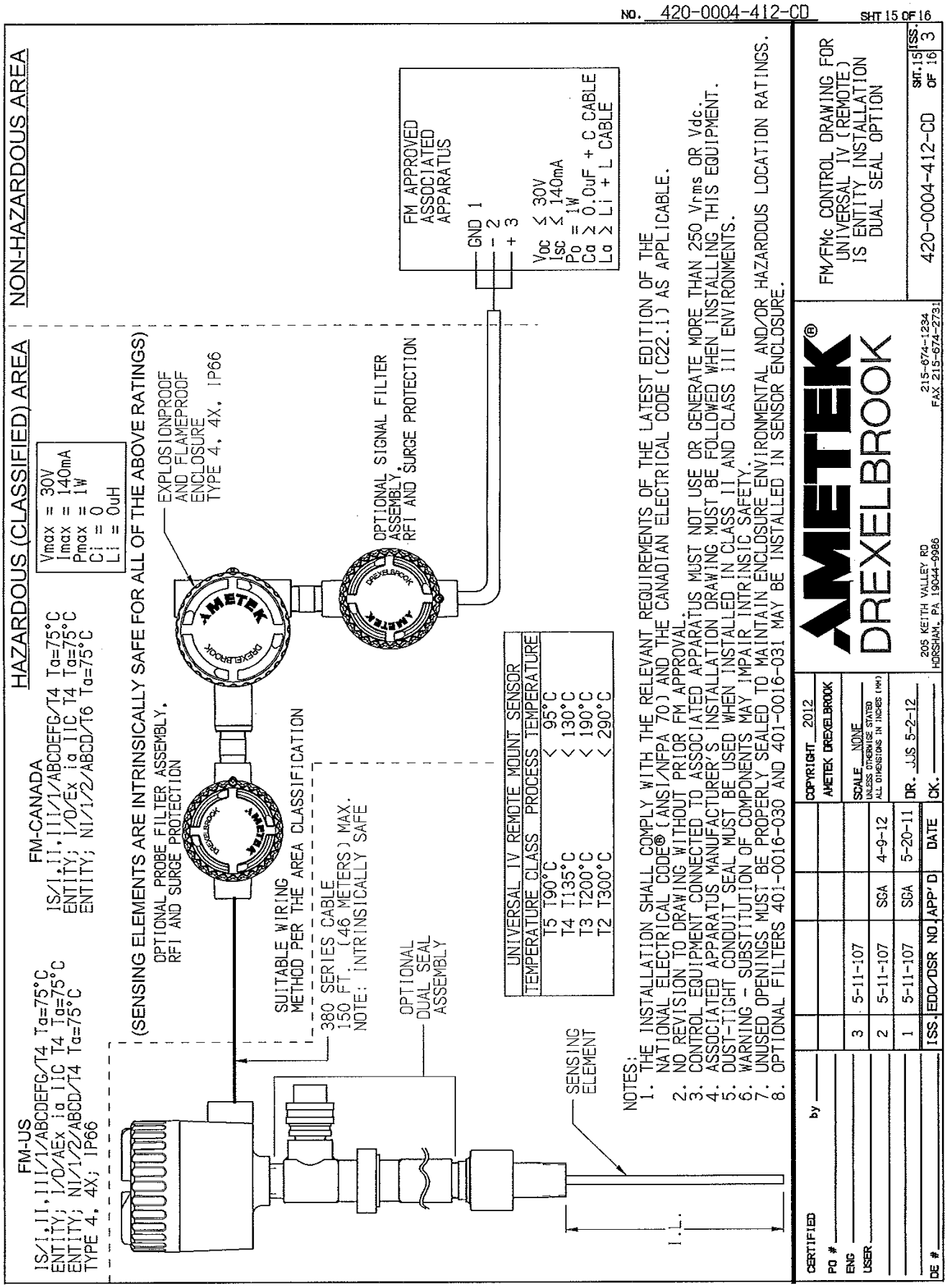

8.2 FM US / FMC (Continued)

NO. 420-0004-412-CD SHT 16 OF 16

SPECIFIC CONDITIONS FOR USE:
THE APPARATUS ENCLOSURE CONTAINS ALUMINUM AND IS CONSIDERED TO CONSTITUTE A POTENTIAL RISK OF IGNITION BY IMPACT OR FRICTION. CARE MUST BE TAKEN INTO ACCOUNT DURING INSTALLATION AND USE TO PREVENT IMPACT OR FRICTION.

CERTIFIED MODELS

Uab101cde1fg

a = TYPE P, L, OR C.
b = FREQUENCY AND PHASING 0, 1, 2, 3
c = ENTRIES 0, 2
d = SURGE/NOISE SUPRESSION 0, 1, 2, 3, 4, 5, 6, 7, D
e = CABLE OPTIONS: 1,2,3,4,5,6,7,8,9,A,C,B,D,E,F,G,H,J,K,L,M,N,P,R,S,Z
f = SENSING ELEMENT: 101, 102, 103, 104, 105, 106, 107, 108, 109, 110, 111, 112, 113, 301, 302, 303, 304, 305, 306, 307, 308, 309, 310, 311, 312, 313, 314, 315, 316, 317, 318, 319, 320, 321, 322, 323, 324, 325, 326, 327, 328, 329, 330, 331, 332, 333, 334, 335, 601, 603, 604, 605, 606, 607, 608, 609, 610, 611, 612, 613

g = 24 CHARACTER NUMBERING SYSTEM THAT DOES NOT AFFECT SAFETY

ISS.	EDO/DSR NO.	APP'D	DATE
3	5-11-107	SG	5-3-12
2	5-11-107	SGA	4-9-12
1	5-11-107	SGA	5-20-11

CERTIFIED
PO #
ENG
USER
DE #
by

COPYRIGHT 2012
AMETEK DREXELBROOK

SCALE NONE
UNLESS OTHERWISE STATED ALL DIMENSIONS IN INCHES (MM)
DR. JJS 5-2-12
CK.

AMETEK®
DREXELBROOK
205 KEITH VALLEY RD
HORSHAM, PA 19044-9986
215-674-1234
FAX 215-674-2731

FM/FMc CONTROL DRAWING FOR
UNIVERSAL IV (REMOTE)
IS ENTITY INSTALLATION
DUAL SEAL OPTION

420-0004-412-CD SHT. 16 OF 16 ISS. 3

Section 9: Approval Certificates

9.1 FM US Approval Certificate

420-0004-429		Sht. 1 of 6	APP'D BY SGA
ISSUE	EDO NO.	APP'D	DATE
1	5-12-106	SGA	5-17-2006

FM Approvals

Member of the FM Global Group

FM Approvals
1151 Boston Providence Turnpike
P.O. Box 9102 Norwood, MA 02062 USA
T: **781 762 4300** F: 781-762-9375 www.fmapprovals.com

CERTIFICATE OF COMPLIANCE

HAZARDOUS (CLASSIFIED) LOCATION ELECTRICAL EQUIPMENT

This certificate is issued for the following equipment:

Uab102cd00ef. Universal IV - Integral
XP-IS / I / 1 / CD / T4 Ta = 75 °C
I / 1 / AEx d ia IIB T4 Ta = 75 °C
DIP-IS / II, III / 1 / EFG / T4 Ta = 75 °C
NI / I / 2 / ABCD / T4 Ta = 75 °C
Type 4, 4X; IP66
a = Type P, L, or C.
b = Frequency and Phasing 0, 1, 2, or 3.
c = Entries 0 or 2.
d = Surge/Noise suppression 0 or 1.
e = Sensing element R111, R112, R113, R114, R115, 251, 252, 253, 254, 255, 256, 257, 258, 259, 260, 261, 262, 301, 302, 303, 304, 305, 306, 307, 308, 309, 310, 311, 312, 313, 314, 315, 316, 317, 318, 319, 320, 321, 322, 323, 324, 325, 326, 327, 502, 503, 504, 505, 506, 507, 508, 510, 511, or 512.
f = 24 character numbering system not affecting safety.

Uab102cd01ef. Universal IV - Integral with Dual Seal
XP-IS / I / 1 / CD / T4 Ta = 75 °C
I / 1 / AEx d ia IIB T4 Ta = 75 °C
DIP-IS / II, III / 1 / EFG / T4 Ta = 75 °C
NI / I / 2 / ABCD / T4 Ta = 75 °C
Type 4, 4X; IP66
a = Type P, L, or C.
b = Frequency and Phasing 0, 1, 2, or 3.
c = Entries 0 or 2.
d = Surge/Noise suppression 0 or 1.
e = Sensing element 101, 102, 103, 104, 105, 106, 107, 108, 109, 110, 111, 112, 113, 301, 302, 303, 304, 305, 306, 307, 308, 309, 310, 311, 312, 313, 314, 315, 316, 317, 318, 319, 320, 321, 322, 323, 324, 325, 326, 327.
f = 24 character numbering system not affecting safety.

9.1 FM US Approval Certificate (Continued)

420-0004-429	Sht. 2 of 6	ISSUE 1

FM Approvals
Member of the FM Global Group

Uab101cd00ef. Universal IV - Integral
IS / I, II, III / 1 / ABCDEFG / T4 Ta = 75 °C – 420-0004-412-CD
I / 0 / AEx ia IIC / T4 Ta = 75 °C – 420-0004-412-CD
NI / I / 2 / ABCD / T4 Ta = 75°C;
Type 4, 4X; IP66
a = Type P, L, or C.
b = Frequency and Phasing 0, 1, 2, or 3.
c = Entries 0 or 2.
d = Surge/noise suppression 0 or 1.
e = Sensing element R00, R01, R02, R03, R04, R05, 251, 252, 253, 254, 255, 256, 257, 258, 259, 260, 261, 262, 301, 302, 303, 304, 305, 306, 307, 308, 309, 310, 311, 312, 313, 314, 315, 316, 317, 318, 319, 320, 321, 322, 323, 324, 325, 326, 327, 328, 329, 330, 331, 332, 333, 334, 335, 501, 502, 503, 504, 505, 506, 507, 508, 509, 510, 511, 512, 513, 601, 603604, 605, 606, 607, 608, 609, 610, 611, 613, 703, 705, 706, 708, 709, 713, 714, 715, 722, or any other 7 digit numeric combination maintaining the limits of 420-0004-412-CD.
f = 24 character numbering system not affecting safety.

Uab101cd01ef. Universal IV – Integral with Dual Seal
IS / I, II, III / 1 / ABCDEFG / T4 Ta = 75 °C – 420-0004-412-CD
I / 0 / AEx ia IIC / T4 Ta = 75 °C – 420-0004-412-CD
NI / I / 2 / ABCD / T4 Ta = 75°C;
Type 4, 4X; IP66
a = Type P, L, or C.
b = Frequency and Phasing 0, 1, 2, or 3.
c = Entries 0 or 2.
d = Surge/noise suppression 0 or 1.
e = Sensing element 101, 102, 103, 104, 105, 106, 107, 108, 109, 110, 111, 112, 113, 301, 302, 303, 304, 305, 306, 307, 308, 309, 310, 311, 312, 313, 314, 315, 316, 317, 318, 319, 320, 321, 322, 323, 324, 325, 326, 327, 328, 329, 330, 331, 332, 333, 334, 335, 601, 603, 604, 605, 606, 607, 608, 609, 610, 611, 613.
f = 24 character numbering system not affecting safety.

9.1 FM US Approval Certificate (Continued)

420-0004-429	Sht. 3 of 6	ISSUE 1

FM Approvals
Member of the FM Global Group

Uab102cde0fg. Universal IV - Remote
XP-AIS / I / 1 / CD / T4 Ta = 75 °C;
I / 1 / AEx d [ia] IIB T4 Ta = 75 °C;
DIP-AIS / II, III / 1 / EFG / T4 Ta = 75 °C;
NI / I / 2 / ABCD / T4 Ta = 75 °C;
Type 4, 4X; IP66
a = Type P, L, or C.
b = Frequency and Phasing 0, 1, 2, or 3.
c = Entries 0 or 2.
d = Surge/Noise suppression 0, 1, 2, 3, 4, 5, 6, 7, or D
e = Cable options 1, 2, 3, 4, 5, 6, 7, 8, 9, A, B, C, D, E, F, G, H, J, K, L, M, N, P, R, S, or Z
f = Sensing element RO9, 000, 101, 102, 103, 104, 105, 106, 107, 108, 109, 110, 111, 112, 113, 301, 302, 303, 304, 305, 306, 307, 308, 309, 310, 311, 312, 313, 314, 315, 316, 317, 318, 319, 320, 321, 322, 323, 324, 325, 326, 327, 328, 329, 330, 331, 332, 333, 334, 335, 501, 502, 503, 504, 505, 506, 507, 508, 509, 510, 513, 601, 603, 604, 605, 606, 607, 608, 609, 607, 608, 609, 610, 611, 612, 613, 701, 702, 703, 704, 705, 706, 707, 708, 709, 710, 711, 712, 713, 714, 715, 716, 717, 718, 719, 720, 721, 722, 723, 724, 725, 726, 727, 728, 729, 730, 731, 732, 735, 736, 737, 738, 739, 740, 741, 742, 743, 744, 745, 746, 747, 748, 749, 750, 751, 752, or any other 7 digit numeric combination maintaining the limits of 420-0004-412-CD.
g = 24 character numbering system not affecting safety.

Uab102cde1fg. Universal IV – Remote with Dual Seal
XP-AIS / I / 1 / CD / T4 Ta = 75 °C;
I / 1 / AEx d [ia] IIB T4 Ta = 75 °C;
DIP-AIS / II, III / 1 / EFG / T4 Ta = 75 °C;
NI / I / 2 / ABCD / T4 Ta = 75 °C;
Type 4, 4X; IP66
a = Type P, L, or C.
b = Frequency and Phasing 0, 1, 2, or 3.
c = Entries 0 or 2.
d = Surge/Noise suppression 0, 1, 2, 3, 4, 5, 6, 7, or D.
e = Cable options 1, 2, 3, 4, 5, 6, 7, 8, 9, A, B, C, D, E, F, G, H, J, K, L, M, N, P, R, S, or Z
f = Sensing element 101, 102, 103, 104, 105, 106, 107, 108, 109, 110, 111, 112, 113, 301, 302, 303, 304, 305, 306, 307, 308, 309, 310, 311, 312, 313, 314, 315, 316, 317, 318, 319, 320, 321, 322, 323, 324, 325326, 327, 328, 329, 330, 331, 332, 333, 334, 335, 601, 603, 604, 605, 606, 607, 608, 609, 607, 608, 609, 610, 611, 612, or 613.
g = 24 character numbering system not affecting safety.

Uab101cde0fg. Universal IV - Remote
IS / I, II, III / 1 / ABCDEFG / T4 Ta = 75 °C – 420-0004-412-CD
I / 0 / AEx ia IIC / T4 Ta = 75°C – 420-0004-412-CD
NI / I / 2 / ABCD / T4 Ta = 75°C;
Type 4, 4X; IP66
a = Type P, L, or C.
b = Frequency and Phasing 0, 1, 2, or 3.
c = Entries 0 or 2.
d = Surge/Noise suppression 0, 1, 2, 3, 4, 5, 6, 7, or D.
e = Cable options 1, 2, 3, 4, 5, 6, 7, 8, 9, A, B, C, D, E, F, G, H, J, K, L, M, N, P, R, S, Z.
f = Sensing element RO9, 000, 101, 102, 103, 104, 105, 106, 107, 108, 109, 110, 111, 112, 113, 301, 302, 303, 304, 305, 306, 307, 308, 309, 310, 311, 312, 313, 314, 315, 316, 317,

9.1 FM US Approval Certificate (Continued)

420-0004-429	Sht. 4 of 6	ISSUE 1

FM Approvals
Member of the FM Global Group

318, 319, 320, 321, 322, 323, 324, 325, 326, 327, 328, 329, 330, 331, 332, 333, 334, 335, 501, 502, 503, 504, 505, 506, 507, 508, 509, 510, 513, 601, 603, 604, 605, 606, 607, 608, 609, 607, 608, 609, 610, 611, 612, 613, 701, 702, 703, 704, 705, 706, 707, 708, 709, 710, 711, 712, 713, 714, 715, 716, 717, 718, 719, 720, 721, 722, 723, 724, 725, 726, 727, 728, 729, 730, 731, 732, 735, 736, 737, 738, 739, 740, 741, 742, 743, 744, 745, 746, 747, 748, 749, 750, 751, 752, or any other 7 digit numeric combination maintaining the limits of 420-0004-412-CD.

g = 24 character numbering system not affecting safety.

Special Conditions of Use:

1. In Zone 0 locations, care must be taken when installing the aluminium enclosure that even in the event of rare incidents, an ignition source due to impact or friction between the enclosure and iron / steel is excluded.

Uab101cde1fg. Universal IV – Remote with Dual Seal

IS / I, II, III / 1 / ABCDEFG / T4 Ta = 75 °C – 420-0004-412-CD
I / 0 / AEx ia IIC / T4 Ta = 75°C – 420-0004-412-CD
NI / I / 2 / ABCD / T4 Ta = 75°C;
Type 4, 4X; IP66

a = Type P, L, or C.
b = Frequency and Phasing 0, 1, 2, or 3.
c = Entries 0 or 2.
d = Surge/noise suppression 0, 1, 2, 3, 4, 5, 6, 7, or D.
e = Cable options 1, 2, 3, 4, 5, 6, 7, 8, 9, A, B, C, D, E, F, G, H, J, K, L, M, N, P, R, S, Z.
f = Sensing element 101, 102, 103, 104, 105, 106, 107, 108, 109, 110, 111, 112, 113, 301, 302, 303, 304, 305, 306, 307, 308, 309, 310, 311, 312, 313, 314, 315, 316, 317, 318, 319, 320, 321, 322, 323, 324, 325, 326, 327, 328, 329, 330, 331, 332, 333, 334, 335, 601, 603, 604, 605, 606, 607, 608, 609, 610, 611, 612, or 613.
g = 24 character numbering system not affecting safety.

Special Conditions of Use:

1. *In Zone 0 locations, care must be taken when installing the aluminium enclosure that even in the event of rare incidents, an ignition source due to impact or friction between the enclosure and iron / steel is excluded.*

9.1 FM US Approval Certificate (Continued)

420-0004-429	Sht. 5 of 6	ISSUE 1

FM Approvals
Member of the FM Global Group

700-a, Sensor.
IS / I, II, III / 1 / ABCDEFG / T2…T6 Ta = 75°C
I / 1 / AEx ia IIC T2…T6 Ta = 75°C
a = 1202-014, 1202-001, 1202-018, 1202-041, 0001-022, 0001-024, 0001-026, 0001-034, 0001-044, 0001-054, 0001-0634, 0001-344, 0002-023, 0002-024, 0002-027, 0002-028, 0002-033, 0002-054, 0002-321, 0002-360, 0005-054, 0201-005, 0201-025, 0201-026, 0201-028, 0201-036, 1202-031, 1202-033, 1202-061, 1202-081, 0001-016, 0001-324, 0003-009, 0005-035, 0005-048, 0005-348, 0202-036, 0202-043, 0001-040, 0001-074, 0002-037, 0002-040, 0002-044, 0002-057, 0002-064, 0002-224, 0002-321, 0201-027, 0201-051, 0201-052, 0201-058, 0201-059, 0202-002, 0202-053, 0001-018, 0001-045, 0002-027, 0002-029, 0002-036, 0002-046, 0002-059, 0002-227, 0002-363, 0004-031, 0004-050, 0005-009, 0005-018, 0005-019, 0005-028, 0005-029, 0005-036, 0005-045, 0005-085, 0005-095, 0005-096, 0005-354, 0009-002, 0009-024, 0009-057, 011-001, 011-003, 011-015, 0021-001, 0021-002, 0021-003, 0021-007, 0202-054, 0202-056, 0203-003, 0203-004, 0204-002, 0204-022, 0204-024, 0204-038, 0204-048, 0204-049, 0205-005, 0205-015, 0205-018, 0205-075, 0205-078, 0205-079, 0209-002, 0209-024, 1202-010, 9100-403, 1202-061, 9100-195, 1202-051, or any other 7 digit numeric combination maintaining the limits of 420-0004-412-CD.

Equipment Ratings:

The Universal IV Level Transmitter is rated as Intrinsically Safe for Class I, II and III, Groups A-G and Class I, Zone 0, Group IIC, in accordance with drawing 420-0004-412-12; Nonincendive Class I, Division 2, Groups A-D Hazardous (Classified) Locations.

Furthermore, the Integral version is rated as Explosionproof for Class I, Division 1, Groups C & D; Dust Ignitionproof for Class II & III, Division 1, Groups E-G and Class I, Zone 1, Group IIB Hazardous (Classified) Locations with an integral sensor that is Intrinsically Safe for Class I, II & III, Groups A-G and Class I, Zone 1 Hazardous (Classified) Locations. The Remote version is rated as Explosionproof Class I, Division 1, Groups C & D; Dust-Ignitionproof for Class II & III, Division 1, Groups E-G and Class I, Zone 1, Group IIB Hazardous (Classified) Locations with connections to a 700 Series sensor that is Intrinsically Safe for Class I, II & III, Groups A-G and Class I, Zone 1 Hazardous (Classified) Locations.

FM Approved for:

AMETEK Drexelbrook
Horsham, PA

9.1 FM US Approval Certificate (Continued)

420-0004-429	Sht. 6 of 6	ISSUE 1

FM Approvals

Member of the FM Global Group

This certifies that the equipment described has been found to comply with the following Approval Standards and other documents:

FM Class 3600	2011
FM Class 3610	2010
FM Class 3611	2004
FM Class 3615	2006
ANSI / ISA 60079-0	2009
ANSI / ISA 60079-1	2009
ANSI / ISA 60079-11	2011
ANSI / ISA 60079-31	2009
ANSI / IEC 60529	2004

Original Project ID: 3043661 Approval Granted: 11 May 2012

Subsequent Revision Reports / Date Approval Amended

Report Number	Date	Report Number	Date

FM Approvals LLC

J.E. Marquedant

J.E. Marquedant
Group Manager, Electrical

11 May 2012
Date

FM Approvals HLC 6/07

3043661
Page 6 of 6

9.2 FM Canada Approval Certificate

420-0004-430		Sht. 1 of 6	APP'D BY SGA
ISSUE	EDO NO.	APP'D	DATE
1	5-12-106	SGA	5-17-2012

FM Approvals

Member of the FM Global Group

FM Approvals
1151 Boston Providence Turnpike
P.O. Box 9102 Norwood, MA 02062 USA
T: **781 762 4300** F: 781-762-9375 www.fmapprovals.com

CERTIFICATE OF COMPLIANCE

HAZARDOUS LOCATION ELECTRICAL EQUIPMENT
PER CANADIAN REQUIREMENTS

This certificate is issued for the following equipment:

Uab102cd00ef. Universal IV - Integral
XP-IS / I / 1 / CD / T4 Ta = 75 °C
I / 1 / Ex d ia IIB T4 Ta = 75 °C
DIP-IS / II, III / 1 / EFG / T4 Ta = 75 °C
NI / I / 2 / ABCD / T4 Ta = 75 °C
Type 4, 4X; IP66
a = Type P, L, or C.
b = Frequency and Phasing 0, 1, 2, or 3.
c = Entries 0 or 2.
d = Surge/Noise suppression 0 or 1.
e = Sensing element R111, R112, R113, R114, R115, 251, 252, 253, 254, 255, 256, 257, 258, 259, 260, 261, 262, 301, 302, 303, 304, 305, 306, 307, 308, 309, 310, 311, 312, 313, 314, 315, 316, 317, 318, 319, 320, 321, 322, 323, 324, 325, 326, 327, 502, 503, 504, 505, 506, 507, 508, 510, 511, or 512.
f = 24 character numbering system not affecting safety.

Uab102cd01ef. Universal IV - Integral with Dual Seal
XP-IS / I / 1 / CD / T4 Ta = 75 °C
I / 1 / Ex d ia IIB T4 Ta = 75 °C
DIP-IS / II, III / 1 / EFG / T4 Ta = 75 °C
NI / I / 2 / ABCD / T4 Ta = 75 °C
Type 4, 4X; IP66
a = Type P, L, or C.
b = Frequency and Phasing 0, 1, 2, or 3.
c = Entries 0 or 2.
d = Surge/Noise suppression 0 or 1.
e = Sensing element 101, 102, 103, 104, 105, 106, 107, 108, 109, 110, 111, 112, 113, 301, 302, 303, 304, 305, 306, 307, 308, 309, 310, 311, 312, 313, 314, 315, 316, 317, 318, 319, 320, 321, 322, 323, 324, 325, 326, 327.
f = 24 character numbering system not affecting safety.

9.2 FM Canada Approval Certificate (Continued)

420-0004-430	Sht. 2 of 6	ISSUE 1

FM Approvals
Member of the FM Global Group

Uab101cd00ef. Universal IV - Integral
IS / I, II, III / 1 / ABCDEFG / T4 Ta = 75 °C – 420-0004-412-CD
I / 0 / Ex ia IIC T4 Ta = 75 °C – 420-0004-412-CD
NI / I / 2 / ABCD / T4 Ta = 75°C;
Type 4, 4X; IP66
a = Type P, L, or C.
b = Frequency and Phasing 0, 1, 2, or 3.
c = Entries 0 or 2.
d = Surge/noise suppression 0 or 1.
e = Sensing element R00, R01, R02, R03, R04, R05, 251, 252, 253, 254, 255, 256, 257, 258, 259, 260, 261, 262, 301, 302, 303, 304, 305, 306, 307, 308, 309, 310, 311, 312, 313, 314, 315, 316, 317, 318, 319, 320, 321, 322, 323, 324, 325, 326, 327, 328, 329, 330, 331, 332, 333, 334, 335, 501, 502, 503, 504, 505, 506, 507, 508, 509, 510, 511, 512, 513, 601, 603604, 605, 606, 607, 608, 609, 610, 611, 613, 703, 705, 706, 708, 709, 713, 714, 715, 722, or any other 7 digit numeric combination maintaining the limits of 420-0004-412-CD.
f = 24 character numbering system not affecting safety.

Uab101cd01ef. Universal IV – Integral with Dual Seal
IS / I, II, III / 1 / ABCDEFG / T4 Ta = 75 °C – 420-0004-412-CD
I / 0 / Ex ia IIC T4 Ta = 75 °C – 420-0004-412-CD
NI / I / 2 / ABCD / T4 Ta = 75°C;
Type 4, 4X; IP66
a = Type P, L, or C.
b = Frequency and Phasing 0, 1, 2, or 3.
c = Entries 0 or 2.
d = Surge/noise suppression 0 or 1.
e = Sensing element 101, 102, 103, 104, 105, 106, 107, 108, 109, 110, 111, 112, 113, 301, 302, 303, 304, 305, 306, 307, 308, 309, 310, 311, 312, 313, 314, 315, 316, 317, 318, 319, 320, 321, 322, 323, 324, 325, 326, 327, 328, 329, 330, 331, 332, 333, 334, 335, 601, 603, 604, 605, 606, 607, 608, 609, 610, 611, 613.
f = 24 character numbering system not affecting safety.

9.2 FM Canada Approval Certificate (Continued)

420-0004-430	Sht. 3 of 6	ISSUE 1

FM Approvals
Member of the FM Global Group

Uab102cde0fg. Universal IV - Remote
XP-AIS / I / 1 / CD / T4 Ta = 75 °C;
I / 1 / Ex d [ia] IIB T4 Ta = 75 °C;
DIP-AIS / II, III / 1 / EFG / T4 Ta = 75 °C;
NI / I / 2 / ABCD / T4 Ta = 75 °C;
Type 4, 4X; IP66
a = Type P, L, or C.
b = Frequency and Phasing 0, 1, 2, or 3.
c = Entries 0 or 2.
d = Surge/Noise suppression 0, 1, 2, 3, 4, 5, 6, 7, or D
e = Cable options 1, 2, 3, 4, 5, 6, 7, 8, 9, A, B, C, D, E, F, G, H, J, K, L, M, N, P, R, S, or Z
f = Sensing element RO9, 000, 101, 102, 103, 104, 105, 106, 107, 108, 109, 110, 111, 112, 113, 301, 302, 303, 304, 305, 306, 307, 308, 309, 310, 311, 312, 313, 314, 315, 316, 317, 318, 319, 320, 321, 322, 323, 324, 325, 326, 327, 328, 329, 330, 331, 332, 333, 334, 335, 501, 502, 503, 504, 505, 506, 507, 508, 509, 510, 513, 601, 603, 604, 605, 606, 607, 608, 609, 607, 608, 609, 610, 611, 612, 613, 701, 702, 703, 704, 705, 706, 707, 708, 709, 710, 711, 712, 713, 714, 715, 716, 717, 718, 719, 720, 721, 722, 723, 724, 725, 726, 727, 728, 729, 730, 731, 732, 735, 736, 737, 738, 739, 740, 741, 742, 743, 744, 745, 746, 747, 748, 749, 750, 751, 752, or any other 7 digit numeric combination maintaining the limits of 420-0004-412-CD.
g = 24 character numbering system not affecting safety.

Uab102cde1fg. Universal IV – Remote with Dual Seal
XP-AIS / I / 1 / CD / T4 Ta = 75 °C;
I / 1 / Ex d [ia] IIB T4 Ta = 75 °C;
DIP-AIS / II, III / 1 / EFG / T4 Ta = 75 °C;
NI / I / 2 / ABCD / T4 Ta = 75 °C;
Type 4, 4X; IP66
a = Type P, L, or C.
b = Frequency and Phasing 0, 1, 2, or 3.
c = Entries 0 or 2.
d = Surge/Noise suppression 0, 1, 2, 3, 4, 5, 6, 7, or D.
e = Cable options 1, 2, 3, 4, 5, 6, 7, 8, 9, A, B, C, D, E, F, G, H, J, K, L, M, N, P, R, S, or Z
f = Sensing element 101, 102, 103, 104, 105, 106, 107, 108, 109, 110, 111, 112, 113, 301, 302, 303, 304, 305, 306, 307, 308, 309, 310, 311, 312, 313, 314, 315, 316, 317, 318, 319, 320, 321, 322, 323, 324, 325326, 327, 328, 329, 330, 331, 332, 333, 334, 335, 601, 603, 604, 605, 606, 607, 608, 609, 607, 608, 609, 610, 611, 612, or 613.
g = 24 character numbering system not affecting safety.

9.2 FM Canada Approval Certificate (Continued)

420-0004-430	Sht. 4 of 6	ISSUE 1

FM Approvals
Member of the FM Global Group

Uab101cde0fg. Universal IV - Remote
IS / I, II, III / 1 / ABCDEFG / T4 Ta = 75 °C – 420-0004-412-CD
I / 0 / Ex ia IIC T4 Ta = 75 °C – 420-0004-412-CD
NI / I / 2 / ABCD / T4 Ta = 75°C;
Type 4, 4X; IP66
a = Type P, L, or C.
b = Frequency and Phasing 0, 1, 2, or 3.
c = Entries 0 or 2.
d = Surge/Noise suppression 0, 1, 2, 3, 4, 5, 6, 7, or D.
e = Cable options 1, 2, 3, 4, 5, 6, 7, 8, 9, A, B, C, D, E, F, G, H, J, K, L, M, N, P, R, S, Z.
f = Sensing element RO9, 000, 101, 102, 103, 104, 105, 106, 107, 108, 109, 110, 111, 112, 113, 301, 302, 303, 304, 305, 306, 307, 308, 309, 310, 311, 312, 313, 314, 315, 316, 317, 318, 319, 320, 321, 322, 323, 324, 325, 326, 327, 328, 329, 330, 331, 332, 333, 334, 335, 501, 502, 503, 504, 505, 506, 507, 508, 509, 510, 513, 601, 603, 604, 605, 606, 607, 608, 609, 607, 608, 609, 610, 611, 612, 613, 701, 702, 703, 704, 705, 706, 707, 708, 709, 710, 711, 712, 713, 714, 715, 716, 717, 718, 719, 720, 721, 722, 723, 724, 725, 726, 727, 728, 729, 730, 731, 732, 735, 736, 737, 738, 739, 740, 741, 742, 743, 744, 745, 746, 747, 748, 749, 750, 751, 752, or any other 7 digit numeric combination maintaining the limits of 420-0004-412-CD.
g = 24 character numbering system not affecting safety.

Uab101cde1fg. Universal IV – Remote with Dual Seal
IS / I, II, III / 1 / ABCDEFG / T4 Ta = 75 °C – 420-0004-412-CD
I / 0 / Ex ia IIC T4 Ta = 75 °C – 420-0004-412-CD
NI / I / 2 / ABCD / T4 Ta = 75°C;
Type 4, 4X; IP66
a = Type P, L, or C.
b = Frequency and Phasing 0, 1, 2, or 3.
c = Entries 0 or 2.
d = Surge/noise suppression 0, 1, 2, 3, 4, 5, 6, 7, or D.
e = Cable options 1, 2, 3, 4, 5, 6, 7, 8, 9, A, B, C, D, E, F, G, H, J, K, L, M, N, P, R, S, Z.
f = Sensing element 101, 102, 103, 104, 105, 106, 107, 108, 109, 110, 111, 112, 113, 301, 302, 303, 304, 305, 306, 307, 308, 309, 310, 311, 312, 313, 314, 315, 316, 317, 318, 319, 320, 321, 322, 323, 324, 325, 326, 327, 328, 329, 330, 331, 332, 333, 334, 335, 601, 603, 604, 605, 606, 607, 608, 609, 610, 611, 612, or 613.
g = 24 character numbering system not affecting safety.

700-a, Sensor.
IS / I, II, III / 1 / ABCDEFG / T2... T6 Ta = 75 °C
I / 1 / Ex ia IIC T2...T6 Ta = 75 °C

a = 1202-014, 1202-001, 1202-018, 1202-041, 0001-022, 0001-024, 0001-026, 0001-034, 0001-044, 0001-054, 0001-0634, 0001-344, 0002-023, 0002-024, 0002-027, 0002-028, 0002-033, 0002-054, 0002-321, 0002-360, 0005-054, 0201-005, 0201-025, 0201-026, 0201-028, 0201-036, 1202-031, 1202-033, 1202-061, 1202-081, 0001-016, 0001-324, 0003-009, 0005-035, 0005-048, 0005-348, 0202-036, 0202-043, 0001-040, 0001-074, 0002-037, 0002-040, 0002-044, 0002-057, 0002-064, 0002-224, 0002-321, 0201-027, 0201-051, 0201-052, 0201-058, 0201-059, 0202-002, 0202-053, 0001-018, 0001-045, 0002-027, 0002-029, 0002-036, 0002-046, 0002-059, 0002-227, 0002-363, 0004-031, 0004-050, 0005-009, 0005-018, 0005-019, 0005-028, 0005-029, 0005-036, 0005-045, 0005-085, 0005-095, 0005-096, 0005-354, 0009-002, 0009-024, 0009-057, 011-001, 011-

9.2 FM Canada Approval Certificate (Continued)

420-0004-430	Sht. 5 of 6	ISSUE 1

FM Approvals

Member of the FM Global Group

003, 011-015, 0021-001, 0021-002, 0021-003, 0021-007, 0202-054, 0202-056, 0203-003, 0203-004, 0204-002, 0204-022, 0204-024, 0204-038, 0204-048, 0204-049, 0205-005, 0205-015, 0205-018, 0205-075, 0205-078, 0205-079, 0209-002, 0209-024, 1202-010, 9100-403, 1202-061, 9100-195, 1202-051, or any other 7 digit numeric combination maintaining the limits of 420-0004-412-CD.

Equipment Ratings:

The Universal IV Level Transmitter is rated as Intrinsically Safe for Class I, II and III, Groups A-G and Class I, Zone 0, Group IIC, in accordance with drawing 420-0004-412-12; Nonincendive Class I, Division 2, Groups A-D Hazardous Locations.

Furthermore, the Integral version is rated as Explosionproof for Class I, Division 1, Groups C & D; Dust Ignitionproof for Class II & III, Division 1, Groups E-G and Class I, Zone 1, Group IIB Hazardous Locations with an integral sensor that is Intrinsically Safe for Class I, II & III, Groups A-G and Class I, Zone 1 Hazardous Locations. The Remote version is rated as Explosionproof Class I, Division 1, Groups C & D; Dust-Ignitionproof for Class II & III, Division 1, Groups E-G and Class I, Zone 1, Group IIB Hazardous Locations with connections to a 700 Series sensor that is Intrinsically Safe for Class I, II & III, Groups A-G and Class I, Zone 1 Hazardous Locations.

FM Approved for:

AMETEK Drexelbrook
Horsham, PA

9.2 FM Canada Approval Certificate (Continued)

420-0004-430	Sht. 6 of 6	ISSUE 1

FM Approvals
Member of the FM Global Group

This certifies that the equipment described has been found to comply with the following Approval Standards and other documents:

CSA C22.2 No. 0.4 - 1982	Reaffirmed 2009
CSA C22.2 No. 0.5-1982	Reaffirmed 2008
CSA-C22.2 No. 25-1966	Reaffirmed 2009
CSA-C22.2 No. 30-1988	Reaffirmed 2007
CSA-C22.2 No. 94-M91	Reaffirmed 2011
CSA C22.2 No. 142-M1987	Reaffirmed 2009
CSA C22.2 No. 213	Reaffirmed 2008
CSA C22.2 No. 60529	2010
CAN / CSA E60079-0	2007
CAN / CSA E60079-1	2007
CAN / CSA E60079-11:2001-02	2011

Original Project ID: 3043661C Approval Granted: May 11, 2012

Subsequent Revision Reports / Date Approval Amended

Report Number	Date	Report Number	Date

FM Approvals LLC

J.E. Marquedant
Group Manager, Electrical

11 May 2012
Date

FM Approvals HLC 6/07

3043661C
Page 6 of 6

9.3 IECEx Approval Certificate

420-0004-431		Sht. 1 of 5	APP'D BY SGA
ISSUE	EDO NO.	APP'D	DATE
1	5-12-106	SGA	5-17-2012

IECEx Certificate of Conformity

INTERNATIONAL ELECTROTECHNICAL COMMISSION
IEC Certification Scheme for Explosive Atmospheres
for rules and details of the IECEx Scheme visit www.iecex.com

Certificate No.: IECEx FMG 11.0024X Issue No.:0 Certificate history:

Status: Current

Date of Issue: 2012-05-11 Page 1 of 3

Applicant: **AMETEK Drexelbrook**
205 Keith Valley Road
Horsham, PA 19044
United States of America

Electrical Apparatus: **Universal IV Level Transmitter**
Optional accessory:

Type of Protection: **Intrinsic Safety "i"; Flameproof "d"**

Marking:
Integral:
Ex ia IIC T4 Ga; Ex d ia IIB T4 Gb; Ex tb ia IIIC T90°C Db; -40°C ≤ Ta ≤ +75°C; IP66
Input Voltage: 13-30Vdc; 1W
Remote:
Ex ia IIC T4 Ga; Ex tb [ia] IIIC T90°C Db; Ex d [ia] IIB T4 Gb; Ex tb [ia] IIIC T90°C Db; -40°C ≤ Ta ≤ +75°C; IP66
Input Voltage: 13-30Vdc; 1W
Remote Sensor:
Ex ia IIC T5...T2 Ga; Ex ia IIIC T90°C...T300°C Da; -40°C ≤ Ta ≤ +75°C; IP66

Approved for issue on behalf of the IECEx Certification Body: J. E. Marquedant

Position: Group Manager - Electrical

Signature: (for printed version) J. E. Marquedant

Date: 15 May 2012

1. This certificate and schedule may only be reproduced in full.
2. This certificate is not transferable and remains the property of the issuing body.
3. The Status and authenticity of this certificate may be verified by visiting the Official IECEx Website.

Certificate issued by:

FM Approvals LLC
1151 Boston-Providence Turnpike
Norwood, MA 02062
United States of America

9.3 IECEx Approval Certificate (Continued)

420-0004-431	Sht. 2 of 5	ISSUE 1

IECEx Certificate of Conformity

Certificate No.: IECEx FMG 11.0024X

Date of Issue: **2012-05-11** Issue No.: **0**

Page 2 of 3

Manufacturer: **AMETEK Drexelbrook**
205 Keith Valley Road
Horsham, PA 19044
United States of America

Manufacturing location(s):

This certificate is issued as verification that a sample(s), representative of production, was assessed and tested and found to comply with the IEC Standard list below and that the manufacturer's quality system, relating to the Ex products covered by this certificate, was assessed and found to comply with the IECEx Quality system requirements. This certificate is granted subject to the conditions as set out in IECEx Scheme Rules, IECEx 02 and Operational Documents as amended.

STANDARDS:
The electrical apparatus and any acceptable variations to it specified in the schedule of this certificate and the identified documents, was found to comply with the following standards:

IEC 60079-0 : 2007-10 Edition: 5	Explosive atmospheres - Part 0:Equipment - General requirements
IEC 60079-1 : 2007-04 Edition: 6	Explosive atmospheres - Part 1: Equipment protection by flameproof enclosures "d"
IEC 60079-11 : 2011-06 Edition: 6.0	Explosive atmospheres - Part 11: Equipment protection by intrinsic safety "i"
IEC 60079-31 : 2008 Edition: 1	Explosive atmospheres – Part 31: Equipment dust ignition protection by enclosure 't'

*This Certificate **does not** indicate compliance with electrical safety and performance requirements other than those expressly included in the Standards listed above.*

TEST & ASSESSMENT REPORTS:
A sample(s) of the equipment listed has successfully met the examination and test requirements as recorded in

Test Report:
US/FMG/ExTR11.0027/00

Quality Assessment Report:

CA/CSA/QAR06.0008/03

9.3 IECEx Approval Certificate (Continued)

420-0004-431	Sht. 3 of 5	ISSUE 1

IECEx Certificate of Conformity

Certificate No.: IECEx FMG 11.0024X

Date of Issue: **2012-05-11** Issue No.: **0**

Page 3 of 3

Schedule

EQUIPMENT:
Equipment and systems covered by this certificate are as follows:

See attachment for List of Equipment covered by this certificate

CONDITIONS OF CERTIFICATION: YES as shown below:

Specific Conditions of Use:

Consult the manufacturer if dimensional information on the flameproof joints is necessary.

In locations requiring EPL Ga equipment, care must be taken when installing the aluminium enclosure that even in the event of rare incidents, an ignition source due to impact or friction between the enclosure and iron / steel is excluded.

9.3 IECEx Approval Certificate (Continued)

420-0004-431	Sht. 4 of 5	ISSUE 1

Uab105de00-f. Universal IV - Integral
Ex ia IIC T4 Ga
-40°C ≤ T_{AMB} ≤ +75°C; IP66
a = Type P, L, or C.
b = Frequency and Phasing 0, 1, 2, or 3:
d = Entries 1 or 2.
e = Surge suppression 0 or 1
f = Sensing element R00, R01, R02, R02, R03, R04, R05, 251, 252, 253, 254, 255, 256, 257, 258, 259, 260, 261, 262, 301, 302, 303, 304, 305, 306, 307, 308, 309, 310, 311, 312, 313, 314, 315, 316, 317, 318, 319, 320, 321, 322, 323, 324, 325, 326, 327, 328, 329, 330, 331, 332, 333, 334, 335, 501, 502, 503, 504, 505, 506, 507, 508, 509, 510, 511, 512, 513, 601, 603, 604, 605, 606, 607, 608, 609, 610, 611, 613, 703, 705, 706, 708, 709, 713, 714, 715, 722, or any other 7 digit numeric combination maintaining the limits of 420-0004-424-CD.
g = 24 character numbering system not affecting safety.

Uab106d00-e. Universal IV - Integral
Ex d ia IIB T4 Gb
Ex tb ia IIIC T90°C Db
-40°C ≤ T_{AMB} ≤ +75°C; IP66
a = Type P, L, or C.
b = Frequency and Phasing 0, 1, 2, or 3.
d = Entries 1 or 2.
e = Sensing element 251, 252, 253, 254, 255, 256, 257, 258, 259, 260, 261, or 262.
f = 24 character numbering system not affecting safety.

Uab105cde0-f. Universal IV - Remote
Ex ia IIC T4 Ga
Ex tb [ia] IIIC T90°C Db
-40°C ≤ T_{AMB} ≤ +75°C; IP66
a = Type P, L, or C.
b = Frequency and Phasing 0, 1, 2, or 3.
d = Entries 1 or 2.
e = Surge suppression 0 or 1.
f = Remote Configuration 1, 2, 3, 4, 5, 6, 7, 8, 9, A, B, C, D, E, F, G, H, J, K, L, M, N, O, P, Q, or Z.
g = Sensing element R09, 000, 101, 102, 103, 104, 105, 106, 107, 108, 109, 110, 111, 112, 113, 301, 302, 303, 304, 305, 306, 307, 308, 309, 310, 311, 312, 313, 314, 315, 316, 317, 318, 319, 320, 321, 322, 323, 324, 325, 326, 327, 328, 329, 330, 331, 332, 333, 334, 335, 501, 502, 503, 504, 505, 506, 507, 508, 509, 510, 513, 601, 603, 604, 605, 606, 607, 608, 609, 610, 611, 612, 613, 701, 702, 703, 704, 705, 706, 708, 709, 710, 711, 712, 713, 714, 715, 716, 717, 718, 719, 720, 721, 722, 723, 724, 725, 726, 727, 728, 729, 730, 731, 732, 735, 736, 737, 738, 739, 740, 741, 742, 743, 744, 745, 746, 747, 748, 749, 750, 751, 752, or any other 7 digit numeric combination maintaining the limits of 420-0004-424-CD.
h = 24 character numbering system not affecting safety.

9.3 IECEx Approval Certificate (Continued)

420-0004-431	Sht. 5 of 5	ISSUE 1

Uab106de0-f. Universal IV - Remote
Ex d [ia] IIB T4 Gb
Ex tb [ia] IIIC T90°C Db
-40°C ≤ T_{AMB} ≤ +75°C; IP66
a = Type P, L, or C.
b = Frequency and Phasing 0, 1, 2, or 3.
d = Entries 1 or 2.
e = Surge suppression 0, 4 or D.
f = Remote Configuration 1, 2, 3, 4, 5, 6, 7, 8, 9, A, B, C, D, E, F, G, H, J, K, L, M, N, O, P, Q, or Z.
g = Sensing element R09, 000, 101, 102, 103, 104, 105, 106, 107, 108, 109, 110, 111, 112, 113, 301, 302, 303, 304, 305, 306, 307, 308, 309, 310, 311, 312, 313, 314, 315, 316, 317, 318, 319, 320, 321, 322, 323, 324, 325, 326, 327, 328, 329, 330, 331, 332, 333, 334, 335, 501, 502, 503, 504, 505, 506, 507, 508, 509, 510, 513, 601, 603, 604, 605, 606, 607, 608, 609, 610, 611, 612, 613, 701, 702, 703, 704, 705, 706, 708, 709, 710, 711, 712, 713, 714, 715, 716, 717, 718, 719, 720, 721, 722, 723, 724, 725, 726, 727, 728, 729, 730, 731, 732, 735, 736, 737, 738, 739, 740, 741, 742, 743, 744, 745, 746, 747, 748, 749, 750, 751, 752, or any other 7 digit numeric combination maintaining the limits of 420-0004-424-CD.
h = 24 character numbering system not affecting safety.

700-a, Sensor.
Ex ia IIC T2...T6 Ga
Ex ia IIIC T300°C...T90°C Da
-40°C ≤ T_{AMB} ≤ +75°C
a = 1202-014, 1202-001, 1202-018, 1202-041, 0001-022, 0001-024, 0001-026, 0001-034, 0001-044, 0001-054, 0001-0634, 0001-344, 0002-023, 0002-024, 0002-027, 0002-028, 0002-033, 0002-054, 0002-321, 0002-360, 0005-054, 0201-005, 0201-025, 0201-026, 0201-028, 0201-036, 1202-031, 1202-033, 1202-061, 1202-081, 0001-016, 0001-324, 0003-009, 0005-035, 0005-048, 0005-348, 0202-036, 0202-043, 0001-040, 0001-074, 0002-037, 0002-040, 0002-044, 0002-057, 0002-064, 0002-224, 0002-321, 0201-027, 0201-051, 0201-052, 0201-058, 0201-059, 0202-002, 0202-053, 0001-018, 0001-045, 0002-027, 0002-029, 0002-036, 0002-046, 0002-059, 0002-227, 0002-363, 0004-031, 0004-050, 0005-009, 0005-018, 0005-019, 0005-028, 0005-029, 0005-036, 0005-045, 0005-085, 0005-095, 0005-096, 0005-354, 0009-002, 0009-024, 0009-057, 011-001, 011-003, 011-015, 0021-001, 0021-002, 0021-003, 0021-007, 0202-054, 0202-056, 0203-003, 0203-004, 0204-002, 0204-022, 0204-024, 0204-038, 0204-048, 0204-049, 0205-005, 0205-015, 0205-018, 0205-075, 0205-078, 0205-079, 0209-002, 0209-024, 1202-010, 9100-403, 1202-061, 9100-195, 1202-051, or any other 7 digit numeric combination maintaining the limits of 420-0004-424-CD.

9.4 ATEX Approval Certificate

420-0004-432	Sht. 1 of 3	APP'D BY SGA
ISSUE	EDO NO.	APPD	DATE
1	6-12-100	SGA	21-5-12

1 EC-TYPE EXAMINATION CERTIFICATE

2 **Equipment or Protective systems intended for use in Potentially Explosive Atmospheres - Directive 94/9/EC**

3 **EC-Type Examination Certificate No:** **FM12ATEX0018X**

4 **Equipment or protective system: (Type Reference and Name)** ***U**103***0-*-*, U**104***0-*-* and 700-**** **Universal IV Level Transmitter with Integral and Remote Sensor**

5 **Name of Applicant:** **AMETEK Drexelbrook**

6 **Address of Applicant:** **205 Keith Valley Road, Horsham, PA 19044 USA**

7 This equipment or protective system and any acceptable variation thereto is specified in the schedule to this certificate and documents therein referred to.

8 FM Approvals Ltd, notified body number 1725 in accordance with Article 9 of Directive 94/9/EC of 23 March 1994, certifies that this equipment has been found to comply with the Essential Health and Safety Requirements relating to the design and construction of equipment intended for use in potentially explosive atmospheres given in Annex II to the Directive.

The examination and test results are recorded in confidential report number:

3043661EC dated 11 May, 2012

9 Compliance with the Essential Health and Safety Requirements, with the exception of those identified in item 15 of the schedule to this certificate, has been assessed by compliance with the following documents:

EN60079-0:2009, EN60079-1:2007, EN60079-11:2011, EN60079-31:2009, EN60529:1991 + A1:2000

10 If the sign 'X' is placed after the certificate number, it indicates that the equipment is subject to special conditions for safe use specified in the schedule to this certificate.

11 This EC-Type Examination certificate relates only to the design, examination and tests of the specified equipment or protective system in accordance to the directive 94/9/EC. Further requirements of the Directive apply to the manufacturing process and supply of this equipment or protective system. These are not covered by this certificate.

12 The marking of the equipment or protective system shall include:

Universal IV Level Transmitter – Integral
II 1 G Ex ia IIC T4 Ga -40°C ≤ Tamb ≤ +75°C; IP66 *(For models U**103**00-*-*)*
II 2 G Ex d ia IIB T4 Gb -40°C ≤ Tamb ≤ +75°C; IP66 *(For models U**104**00-*-*)*
II 2 D Ex tb ia IIIC Db T90°C -40°C ≤ Tamb ≤ +75°C; IP66 *(For models U**104**00-*-*)*

Universal IV Level Transmitter – Remote (excluding *models U10***00-*-*)***
II 1 G Ex ia IIC T4 -40°C ≤ Tamb ≤ +75°C; IP66 *(For models U**103***0-*-*)*
II 2 (1) G Ex d [ia] IIB T4 -40°C ≤ Tamb ≤ +75°C; IP66 *(For models U**104***0-*-*)*
II 2 (1) D Ex tb [ia] IIIC T90°C -40°C ≤ Tamb ≤ +75°C; IP66 *(For models U**10****0-*-*)*

***700-*,* Universal IV Sensors**
II 1 G Ex ia IIC T2...T5 Ga -40°C ≤ Tamb ≤ +75°C
II 1 D Ex ia IIIC T300°C...T90°C Da -40°C ≤ Tamb ≤ +75°C

Digitally signed by Andrew Was
DN: cn=Andrew Was, o=FM Approvals, ou=Certification Manager, email=andrew.was@fm-approvals.com, c=GB
Date: 2012.05.29 23:20:39 +01'00'

Andrew Was
Certification Manager, FM Approvals Ltd.
Issue date: **29th May 2012**

THIS CERTIFICATE MAY ONLY BE REPRODUCED IN ITS ENTIRETY AND WITHOUT CHANGE

FM Approvals Ltd. 1 Windsor Dials, Windsor, Berkshire, UK. SL4 1RS
T: +44 (0) 1753 750 000 F: +44 (0) 1753 868 700 E-mail: atex@fmapprovals.com www.fmapprovals.com

F ATEX 020 (Jun/10) Page 1 of 3

9.4 ATEX Approval Certificate (Continued)

FM Approvals
Member of the FM Global Group

ISSUE 1 | Sht. 2 of 3 | 420-0004-432

SCHEDULE

to EC-Type Examination Certificate No. FM12ATEX0018X

13 **Description of Equipment or Protective System:**

The model series Universal IV Level Transmitter is a two-wire capacitance to current transmitter which provides a 4-20 mA current output signal proportional to a change in capacitance at the probe terminals. It is designed to be used in conjunction with the AMETEK-Drexelbrook Series 700 Capacitance Probes.

The transmitter circuitry is contained on five printed circuit boards and housed in an aluminium housing. Terminals are supplied, and appropriately marked, for power connections and also connection to the sensing probes. A majority of the board set is encapsulated in potting material.

The transmitter electronics operate on a supply of 13 to 30 Vdc with an output range of 4-20 mA. The ambient operating temperature range of the transmitter is -40°F to +167°F (-40°C to 75°C). The Energy Limitation Parameters for the intrinsically safe versions are as follows: Ui = 30 V, Ii = 140 mA, Pi = 1 W, Ci = 0, Li = 0

The electronic circuitry is contained in a combination of 5 circuit boards. One of these boards, the Probe Board, is mounted in the main housing and serves as the interface for the probe to the potted electronic module. The remaining 4 circuit boards are assembled in a plastic housing which is potted. The potted assembly contains a Terminal, Display, Power, and Bridge board. There are 3 variations of this potted assembly to service 3 different applications. For these three assemblies, the only differences are different component inclusion/exclusions on the Bridge board.

Model Options:

Uab103de00-f-g. Universal IV – Integral
a = Type P, L, or C.
b = Frequency and Phasing 0, 1, 2, or 3.
d = Entries 1 or 2
e = Surge/Noise suppression 0 or 1
f = Sensing element R00, R01, R02, R02, R03, R04, R05, 251, 252, 253, 254, 255, 256, 257, 258, 259, 260, 261, 262, 301, 302, 303, 304, 305, 306, 307, 308, 309, 310, 311, 312, 313, 314, 315, 316, 317, 318, 319, 320, 321, 322, 323, 324, 325, 326, 327, 328, 329, 330, 331, 332, 333, 334, 335, 501, 502, 503, 504, 505, 506, 507, 508, 509, 510, 511, 512, 513, 601, 603, 604, 605, 606, 607, 608, 609, 610, 611, 613, 703, 705, 706, 708, 709, 713, 714, 715, 722, or any other 7 digit numeric combination maintaining the limits of 420-0004-424-CD.
g = 24 character numbering system not affecting safety.

Uab104d00-e-f. Universal IV – Integral
a = Type P, L, or C.
b = Frequency and Phasing 0, 1, 2, or 3.
d = Entries 1 or 2
e = Sensing element 251, 252, 253, 254, 255, 256, 257, 258, 259, 260, 261, or 262.
f = 24 character numbering system not affecting safety.

Uab103cde0-f-h. Universal IV – Remote
a = Type P, L, or C.
b = Frequency and Phasing 0, 1, 2, or 3.
c = Entries 1 or 2
d = Surge/Noise suppression 0 or 1
e = Remote Configuration 1, 2, 3, 4, 5, 6, 7, 8, 9, A, B, C, D, E, F, G, H, J, K, L, M, N, O, P, Q, or Z.
f = Sensing element R09, 000, 101, 102, 103, 104, 105, 106, 107, 108, 109, 110, 111, 112, 113, 301, 302, 303, 304, 305, 306, 307, 308, 309, 310, 311, 312, 313, 314, 315, 316, 317, 318, 319, 320, 321, 322, 323, 324, 325, 326, 327, 328, 329, 330, 331, 332, 333, 334, 335, 501, 502, 503, 504, 505, 506, 507, 508, 509, 510, 513, 601, 603, 604, 605, 606, 607, 608, 609, 610, 611, 612, 613, 701, 702, 703, 704, 705, 706, 708, 709, 710, 711, 712, 713, 714, 715, 716, 717, 718, 719, 720, 721, 722, 723, 724, 725, 726, 727, 728, 729, 730, 731, 732, 735, 736, 737, 738, 739, 740, 741, 742, 743, 744, 745, 746, 747, 748, 749, 750, 751, 752, or any other 7 digit numeric combination maintaining the limits of 420-0004-424-CD.
h = 24 character numbering system not affecting safety.

THIS CERTIFICATE MAY ONLY BE REPRODUCED IN ITS ENTIRETY AND WITHOUT CHANGE

FM Approvals Ltd. 1 Windsor Dials, Windsor, Berkshire, UK. SL4 1RS
T: +44 (0) 1753 750 000 F: +44 (0) 1753 868 700 E-mail: atex@fmapprovals.com www.fmapprovals.com

9.4 ATEX Approval Certificate (Continued)

FM Approvals
Member of the FM Global Group

420-0004-432 | Sht. 3 of 3 | ISSUE 1

SCHEDULE

to EC-Type Examination Certificate No. FM12ATEX0018X

Uab104de0-f-h. Universal IV – Remote
a = Type P, L, or C.
b = Frequency and Phasing 0, 1, 2, or 3.
d = Entries 1 or 2
e = Surge/Noise suppression 0, 4 or D.
f = Remote Configuration 1, 2, 3, 4, 5, 6, 7, 8, 9, A, B, C, D, E, F, G, H, J, K, L, M, N, O, P, Q, or Z.
g = Sensing element R09, 000, 101, 102, 103, 104, 105, 106, 107, 108, 109, 110, 111, 112, 113, 301, 302, 303, 304, 305, 306, 307, 308, 309, 310, 311, 312, 313, 314, 315, 316, 317, 318, 319, 320, 321, 322, 323, 324, 325, 326, 327, 328, 329, 330, 331, 332, 333, 334, 335, 501, 502, 503, 504, 505, 506, 507, 508, 509, 510, 513, 601, 603, 604, 605, 606, 607, 608, 609, 610, 611, 612, 613, 701, 702, 703, 704, 705, 706, 708, 709, 710, 711, 712, 713, 714, 715, 716, 717, 718, 719, 720, 721, 722, 723, 724, 725, 726, 727, 728, 729, 730, 731, 732, 735, 736, 737, 738, 739, 740, 741, 742, 743, 744, 745, 746, 747, 748, 749, 750, 751, 752, or any other 7 digit numeric combination maintaining the limits of 420-0004-424-CD.
h = 24 character numbering system not affecting safety.

700-a, Sensor.
a = 1202-014, 1202-001, 1202-018, 1202-041, 0001-022, 0001-024, 0001-026, 0001-034, 0001-044, 0001-054, 0001-0634, 0001-344, 0002-023, 0002-024, 0002-027, 0002-028, 0002-033, 0002-054, 0002-321, 0002-360, 0005-054, 0201-005, 0201-025, 0201-026, 0201-028, 0201-036, 1202-031, 1202-033, 1202-061, 1202-081, 0001-016, 0001-324, 0003-009, 0005-035, 0005-048, 0005-348, 0202-036, 0202-043, 0001-040, 0001-074, 0002-037, 0002-040, 0002-044, 0002-057, 0002-064, 0002-224, 0002-321, 0201-027, 0201-051, 0201-052, 0201-058, 0201-059, 0202-002, 0202-053, 0001-018, 0001-045, 0002-027, 0002-029, 0002-036, 0002-046, 0002-059, 0002-227, 0002-363, 0004-031, 0004-050, 0005-009, 0005-018, 0005-019, 0005-028, 0005-029, 0005-036, 0005-045, 0005-085, 0005-095, 0005-096, 0005-354, 0009-002, 0009-024, 0009-057, 011-001, 011-003, 011-015, 0021-001, 0021-002, 0021-003, 0021-007, 0202-054, 0202-056, 0203-003, 0203-004, 0204-002, 0204-022, 0204-024, 0204-038, 0204-048, 0204-049, 0205-005, 0205-015, 0205-018, 0205-075, 0205-078, 0205-079, 0209-002, 0209-024, 1202-010, 9100-403, 1202-061, 9100-195, 1202-051, or any other 7 digit numeric combination maintaining the limits of 420-0004-424-CD.

14 **Special Conditions for Safe Use:**

1. *Consult the manufacturer if dimensional information on the flameproof joints is necessary.*
2. *In locations requiring EPL Ga or Da equipment, care must be taken when installing the aluminium enclosure that even in the event of rare incidents, an ignition source due to impact or friction between the enclosure and iron / steel is excluded.*

15 **Essential Health and Safety Requirements:**

The relevant EHSRs that have not been addressed by the standards listed in this certificate have been identified and assessed in the confidential report identified in item 8.

16 **Test and Assessment Procedure and Conditions:**

This EC-Type Examination Certificate is the result of testing of a sample of the product submitted, in accordance with the provisions of the relevant specific standard(s), and assessment of supporting documentation. It does not imply an assessment of the whole production.

Whilst this certificate may be used in support of a manufacturer's claim for CE Marking, FM Approvals Ltd accepts no responsibility for the compliance of the equipment against all applicable Directives in all applications.

This Certificate has been issued in accordance with FM Approvals Ltd's ATEX Certification Scheme.

17 **Approved Drawings**

Details of the approved drawings and documents are identified in the confidential report identified in item 8.

THIS CERTIFICATE MAY ONLY BE REPRODUCED IN ITS ENTIRETY AND WITHOUT CHANGE

FM Approvals Ltd. 1 Windsor Dials, Windsor, Berkshire, UK. SL4 1RS
T: +44 (0) 1753 750 000 F: +44 (0) 1753 868 700 E-mail: atex@fmapprovals.com www.fmapprovals.com

9.5 ATEX Declaration of Conformity

420-0004-433		Sht. 1 of 1	APP'D BY SGA
ISSUE	EDO NO.	APP'D	DATE
1	6-12-100	SGA	6-5-12

Declaration of Conformity

AMETEK DREXELBROOK
205 KEITH VALLEY ROAD
HORSHAM, PENNSYLVANIA
USA 19044

We declare under our sole responsibility that the product Universal IV Series Level Measurement Systems to which this declaration relates is in conformity with the following standards and entitled to carry the CE Mark:

Product Type: Measurement, Control Equipment and Laboratory Use
Following the provisions of the EMC Directive 2004/108/EC
Conforms to the requirements of:

Emissions requirements of:
EN 61326-1:2006; Clause 7.2:
CISPR 11 Edition 4:2003 Radiated Emissions, Group 1, Class B
Immunity requirements of EN 61326-1:2006; Table 2:
IEC 61 000-4-2: 2001 Electrostatic Discharge
IEC 61000-4-3: 2002 Radiated Immunity
IEC 61 000-4-4: 2004 EFT/Burst. 1/ 0 leads
IEC 6100Q-4-5: 2001 Surge Immunity, I/O leads
IEC 61 000-4-6: 2003 Conducted Immunity, 1/0 Leads
IEC 61000-4-8: 1993, A1: 2000 Power Frequency Magnetic Fields

Following the provisions of 94/9/EC ATEX Directive,
Conforms to the requirements of:

EN 60079-0 2009	*Electrical apparatus for explosive gas atmospheres- Part 0: General requirements*
EN 60079-11 2007	*Explosive atmospheres- Part 11: Equipment protection by Intrinsic safety "i"*
EN 60079-11 (IEC 60079-11, Ed.6) 201X	*Electrical apparatus for explosive gas atmospheres -Part 11: Equipment protection by Intrinsic safety "i"*
EN 60079-31 2009	*Explosive atmospheres -- Part 31: Equipment dust ignition protection by enclosure "t"*
EN60529+ A1 2000	*Degrees of protection provided by enclosures (IPcode)*
EN 60079-1 2007	*Explosive Atmospheres- Part I: Equipment protection by flameproof enclosures "d"*

EC-Type Examination Certificate Number FM12ATEX0018X Notified Body number 1725

FM Approvals Ltd. 1 Windsor Dials, Windsor, Berkshire, UK. SL4 1 RS

Steven G. Arnold

Steven G. Arnold

Quality Assurance & Product Safety Manager

Issue Date 6-5-2012

Form 440-0001-001 3/1/2006

TERMS AND CONDITIONS OF SALE

AMETEK DREXELBROOK

GENERAL: ***ALL ORDERS ARE SUBJECT TO THE FOLLOWING TERMS AND CONDITIONS. ANY ACCEPTANCE OF ANY OFFER OF BUYER FOR ANY GOODS OR SERVICES IS CONDITIONED UPON THESE TERMS AND CONDITIONS, AND SELLER OBJECTS TO ANY ADDITIONAL OR DIFFERENT TERMS PROPOSED BY BUYER IN ANY DOCUMENT, WHICH SHALL NOT BE BINDING UPON SELLER.*** No salesman or other party is authorized to bind the AMETEK DREXELBROOK Division of AMETEK, Inc. (hereinafter "Seller") by any agreement, warranty, statement, promise, or understanding not herein expressed, and no modifications shall be binding on Seller unless the same are in writing and signed by an executive officer of Seller or his or her duly authorized representative. Verbal orders shall not be executed until written notification has been received and acknowledged by Seller.

QUOTATIONS: Written quotations are valid for thirty (30) days unless otherwise stated. Verbal quotations expire the same day they are made.

PRICES: All prices and terms are subject to change without notice. Buyer-requested changes to its order ("Orders"), including those affecting the identity, scope and delivery of the goods or services, must be documented in writing and are subject to Seller's prior approval and adjustments in price, schedule and other affected terms and conditions. Orders requiring certified test data in excess of commercial requirements, are subject to a special charge.

ORDER ACCEPTANCE: All Orders are subject to final approval and acceptance by Seller at its office located at 205 Keith Valley Road, Horsham, Pennsylvania 19044.

TERMS OF PAYMENT: Seller's standard terms of payment for Buyers who qualify for credit are net thirty (30) days from date of invoice. All invoices must be paid in United States dollars.

CREDIT: Seller reserves the right at any time to revoke any credit extended to Buyer or otherwise modify terms of payment if Buyer fails to pay for any shipments when due or if in Seller's opinion there is a material adverse change in Buyer's financial condition. Seller may, at its option, cancel any accepted Order if Buyer fails to pay any invoices when due.

DELIVERY: Shipments are F.O.B place of manufacture ("Shipping Point") and the Buyer shall pay all freight, transportation, shipping, duties, fees, handling, insurance, storage, demurrage, or similar charges from Shipping Point. Delivery of goods to common carrier shall constitute delivery and passing of title to the Buyer, and all risk of loss or damage in transit shall be borne by Buyer. Any claims or losses for damage or destruction after such delivery shall be the responsibility of Buyer.

Seller reserves the right to make delivery in installments which shall be separately invoiced and paid for when due, without regard to subsequent deliveries. Delay in delivery of any installment shall not relieve Buyer of its obligation to accept remaining deliveries.

Acknowledged shipping dates are approximate only and based on prompt receipt of all necessary information from Buyer and Buyer's compliance with terms of payment.

TAXES: All sales, excise and similar taxes which Seller may be required to pay or collect with respect to the goods and/or services covered by any Order, shall be for the account of the Buyer except as otherwise provided by law or unless specifically stated otherwise by Seller in writing.

TERMINATION AND HOLD ORDERS: No Order may be terminated by Buyer except upon written request by Buyer and approval by Seller, and if said request is approved by Seller, under the following conditions: (1) Buyer agrees to accept delivery of all of the units completed by Seller through the workday on which Seller receives the written termination request; (2) Buyer agrees to pay to Seller all direct costs and expenses applicable to the portion of the Order that is incomplete.

WARRANTY:

A. Hardware: Seller warrants its goods against defects in materials and workmanship under normal use and service for one (1) year from the date of invoice.

B. Software and Firmware: Unless otherwise specified, Seller warrants for a period of one (1) year from date of invoice that standard software or firmware, when used with Seller specified hardware, shall perform in accordance with Seller's published specifications. Seller makes no representation or warranty, expressed or implied, that the operation of the software or firmware shall be uninterrupted or error-free, or that functions contained therein shall meet or satisfy the Buyer's intended use or requirements.

C. Services: Seller warrants that services, including engineering and custom application, whether provided on a fixed cost or time and material basis, shall be performed in accordance with generally accepted industry practices.

D. Remedies: Seller's liability under this section is restricted to replacing, repairing, or issuing credit (at Seller's option) for any returned goods and only under the following conditions: (1) Seller must be promptly notified, in writing, as soon as possible after the defects have been noted by the Buyer, but not later than (1) year from date of invoice from Seller; (2) The defective goods are to be returned to the place of manufacture, shipping charges prepaid by the Buyer; (3) Seller's inspection shall disclose to its satisfaction that the goods were defective in materials or workmanship at the time of shipment; (4) Any warranty service (consisting of time, travel and expenses related to such services) performed other than at Seller's factory, shall be at Buyer's expense.

E. Repaired/Reconditioned Goods: As to out-of-warranty goods which Seller has repaired or reconditioned, Seller warrants for a period of sixty (60) days from date of its invoice only new components replaced in the most recent repair/reconditioning.

F. Returns and Adjustments: No goods may be returned unless authorized in advance by Seller and then only upon such conditions to which Seller may agree. Buyer must obtain an RMA (Return Material Authorization) number from Seller prior to any return shipment and such RMA number must appear on the shipping label and packing slip. Buyer shall be responsible for the returned goods until such time as Seller receives the same at its plant and for all charges for packing, inspection, shipping, transportation, or insurance associated with returned goods. In the event that credit for returned goods is granted, it shall be at the lesser of the then current prices or the original purchase price. Claims for shortage or incorrect material must be made within five (5) days after receipt of shipment.

ALL OTHER WARRANTIES, FOR ANY OF SELLER'S GOODS OR SERVICES, WHETHER ORAL, WRITTEN, EXPRESS, IMPLIED, STATUTORY OR OTHERWISE, INCLUDING WITHOUT LIMITATION ANY IMPLIED WARRANTY OF MERCHANTABILITY OR FITNESS FOR PURPOSE ARE EXCLUDED.

INTELLECTUAL PROPERTY: Seller's sale of goods or provision of related documentation or other materials to Buyer shall not transfer any intellectual property rights to Buyer unless Seller specifically agrees to do so in writing. Seller shall retain ownership of all applicable patents, trademarks, copyrights and other intellectual property rights. Buyer shall not use, copy or transfer any such items in violation of Seller's intellectual property rights or applicable law, or for any purposes other than that for which the items were furnished.

Seller shall defend any lawsuit brought against the Buyer based on a claim that the design or construction of the goods sold hereunder by Seller infringe any United States or Canadian Patent, Copyright or Mask Work Registration, provided that Buyer promptly notifies Seller of such claim in writing and further provided that, at Seller's expense, (1) Buyer gives Seller the sole right to defend or control the defense of the suit or proceeding, including settlement, and (2) Buyer provides all necessary information and assistance for that defense. In the event of a charge of infringement, Seller's obligation under the agreement shall be fulfilled if Seller, at its option and expense, either (i) settles such claim; (ii) procures for Buyer the right to continue using such goods; (iii) replaces or modifies goods to avoid infringement; or (iv) accepts the return of any infringing goods and refunds their purchase price; or (iv) defends against such claim.

If Buyer furnishes specifications or designs to Seller, the obligations of Seller set forth above shall not apply to goods made by Seller using such specifications or designs, and Buyer shall defend, indemnify and hold Seller harmless against any third party claims for infringement which arise out of Seller's use of specifications or designs furnished by Buyer.

SOFTWARE LICENSE: If goods purchased hereunder include software ("Software"), Buyer may use the Software only as part of the goods. Buyer may not use, copy, or transfer any of the Software except as may be permitted under the applicable License Agreement provided with the goods. Buyer's right to use, copy or transfer the Software shall terminate upon termination of Buyer's right to use the goods.

PACKAGING/WEIGHTS AND DIMENSIONS: Buyer specified packing or marking may be subject to additional charges not otherwise included in the price of the goods. Published weights and dimensions are estimates or approximate only and are not warranted.

FORCE MAJEURE: Seller shall not be responsible for delays in delivery or any failure to deliver due to causes beyond Seller's control, including but not limited to the following items: acts of God, war, terrorism, mobilization, civil commotion, riots, embargoes, domestic or foreign governmental regulations or orders, governmental priorities, port congestion, acts of the Buyer, its agents or employees, fires, floods, strikes, lockouts and other labor difficulties, shortages of or inability to obtain shipping space or transportation, inability to secure fuel, supplies or power at current prices or on account of shortages thereof, or due to limitations imposed by the extent of availability of Seller's normal manufacturing facilities.

If a delay excused per the above extends for more than ninety (90) days and the parties have not agreed upon a revised basis for continuing providing the goods or services at the end of the delay, including adjustment of the price, then Buyer, upon thirty (30) days' prior written notice to Seller may terminate the Order with respect to the unexecuted portion of the goods or services, whereupon Buyer shall promptly pay Seller its reasonable termination charges upon submission of Seller's invoices thereof.

LIMITATION OF LIABILITY: Seller's liability for any claim of any kind, except infringement of intellectual property rights, shall not exceed the purchase price of any goods or services which give rise to the claim. ***SELLER SHALL IN NO EVENT BE LIABLE FOR BUYER'S MANUFACTURING COSTS, LOST PROFITS, LOSS OF USE OF THE GOODS OR SERVICES, COST OF CAPITAL, COST OF SUBSTITUTE GOODS, FACILITIES, SERVICES OR REPLACEMENT POWER, DOWNTIME COSTS, CLAIMS OF BUYER'S CUSTOMERS FOR DAMAGES, OR OTHER SPECIAL, PROXIMATE, INCIDENTAL, INDIRECT, EXEMPLARY OR CONSEQUENTIAL DAMAGES.*** Any action against Seller must be brought within eighteen (18) months after the cause of action accrues. These disclaimers and limitations of liability shall apply regardless of the form of action, whether in contract, tort or otherwise, and further shall extend to the benefit of Seller's vendors, appointed distributors and other authorized resellers as third-party beneficiaries.

PROHIBITION FOR HAZARDOUS USE: Goods sold hereunder generally are not intended for application in and shall not be used by Buyer in the construction or operation of a nuclear installation or in connection with the use or handling of nuclear material, or for any hazardous activity or critical application, where failure of a single component could cause substantial harm to persons or property, unless the goods have been specifically approved for such a use or application. Seller disclaims all liability for any loss or damage resulting from such unauthorized use and Buyer shall defend, indemnify and hold harmless the Seller against any such liability, whether as a result of breach of contract, warranty, tort (regardless of the degree of fault or negligence), strict liability or otherwise.

EXPORT CONTROL: Buyer shall comply with all export control laws and regulations of the United States, and all sales hereunder are subject to those laws and regulations. Seller shall not be named as shipper or exporter of record for any goods sold hereunder unless specifically agreed to in writing by Seller. At Seller's request, Buyer shall furnish Seller with end-use and end-user information to determine export license applicability. Buyer warrants, in accordance with U.S. Export Law, that goods sold hereunder shall not be destined for facilities or activities involving nuclear, chemical or biological weapons, or related missile delivery systems in named prohibited regions or countries.

GOVERNING LAW: Seller intends to comply with all laws applicable to its performance under any order. All matters relating to interpretation and effect of these terms and any authorized changes, modifications or amendments thereto shall be governed by the laws of the Commonwealth of Pennsylvania. No government contract regulations or clauses shall apply to the goods or services, this agreement, or act to bind Seller unless specifically agreed to by Seller in writing.

NON-WAIVER BY SELLER: Waiver by Seller of a breach of any of these terms and conditions shall not be construed as a waiver of any other breach.

SEVERABILITY AND ENTIRE AGREEMENT: If any provision of these terms and conditions is unenforceable, the remaining terms shall nonetheless continue in full force and effect. This writing, together with any other terms and conditions Seller specifically agrees to in writing, constitutes the entire terms and conditions of sale between Buyer and Seller and supercedes any and all prior discussions, and negotiations on its subject matter.

AMETEK®
DREXELBROOK
An ISO 9001 Certified Company

205 Keith Valley Road, Horsham, PA 19044
U.S. and Canada: 1-800-553-9092
24-Hour Service: 1-800-527-6297
International: +1 215-674-1234
Fax: +1 215-674-2731
E-mail: drexelbrook.info@ametek.com
Website: www.drexelbrook.com